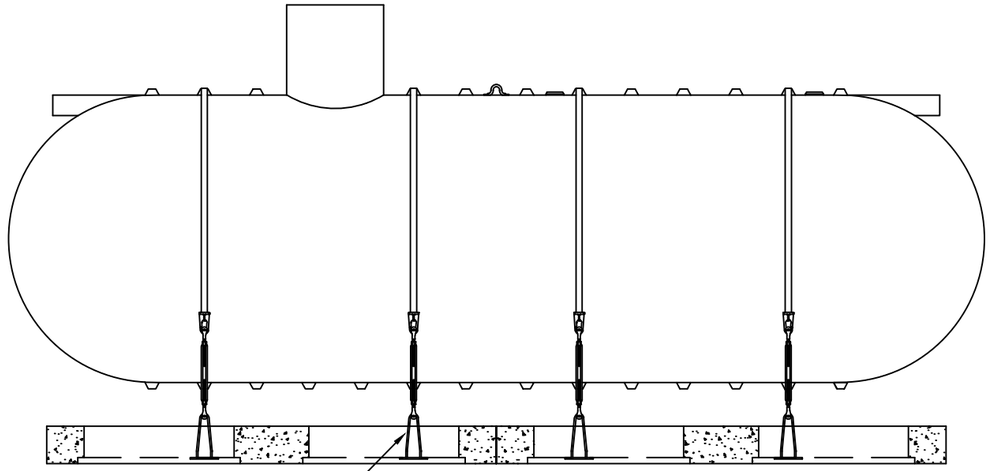

Deadman Detail
Side View

Note: Size of dead men and number of straps determined by tank size.

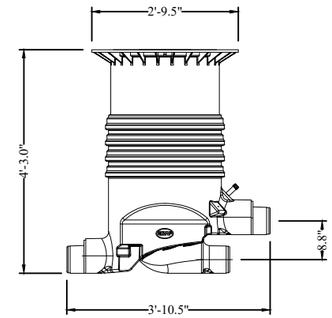

Graf Optimax Industrial
High efficiency, self-cleaning, below ground filtration system.

* Variable installation depth from 31-59 inches
* Flush installation at ground level
* Only 7.87" height offset between inlet and outlet
* 0.35mm (.01") mesh filter
* Lockable childproof cover
* Optional Opticlean® Sprayhead
* Available with vehicle-loading cast iron lid
* Over 95% yield
* Self-cleaning filter
* 6" and 8" connections
* Max. 8,000 sq. ft. with 6" connections
* Max. 16,000 sq. ft. with 8" connections

Optional Backup Components

Rainwater System Controller and Three Way valve Typical Wiring Diagram

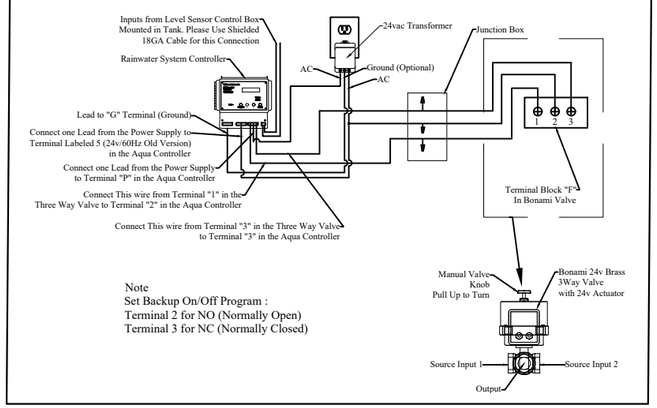

Note
Set Backup On/Off Program :
Terminal 2 for NO (Normally Open)
Terminal 3 for NC (Normally Closed)

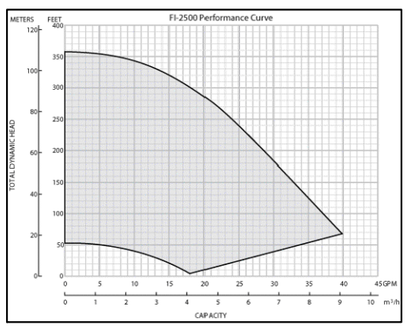

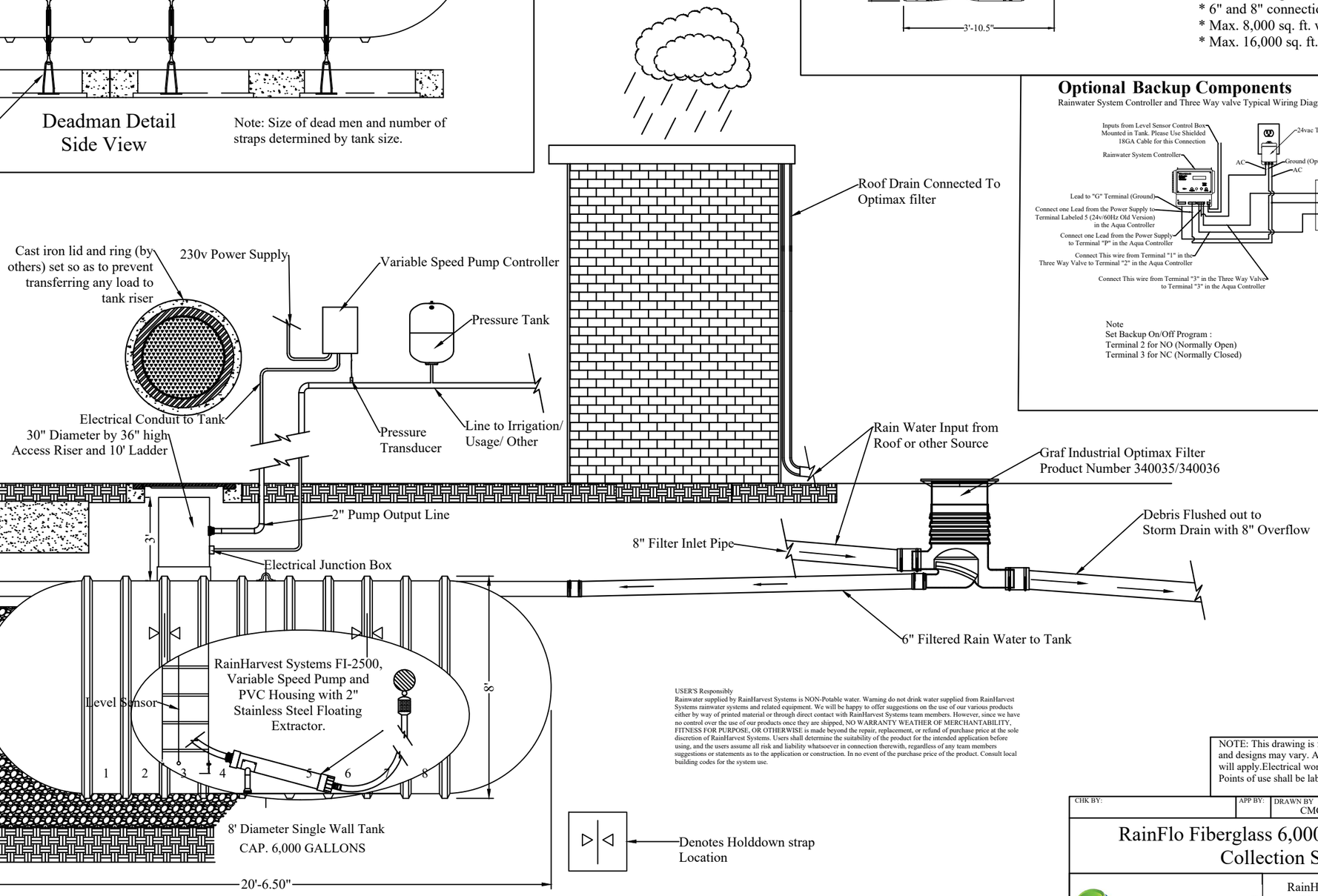

USER'S Responsibly
Rainwater supplied by RainHarvest Systems is NON-Potable water. Warning do not drink water supplied from RainHarvest Systems rainwater systems and related equipment. We will be happy to offer suggestions on the use of our various products either by way of printed material or through direct contact with RainHarvest Systems team members. However, since we have no control over the use of our products once they are shipped, NO WARRANTY WEATHER OF MERCHANTABILITY, FITNESS FOR PURPOSE, OR OTHERWISE is made beyond the repair, replacement, or refund of purchase price at the sole discretion of RainHarvest Systems. Users shall determine the suitability of the product for the intended application before using, and the users assume all risk and liability whatsoever in connection therewith, regardless of any team members suggestions or statements as to the application or construction. In no event of the purchase price of the product. Consult local building codes for the system use.

NOTE: This drawing is for illustrative purposes only. Actual systems and designs may vary. Always check with local building codes as they will apply.Electrical work to be performed by licensed professional. Points of use shall be labeled as: **"Non Potable water, Do Not Drink!**

CHK BY:	APP BY:	DRAWN BY	QUOTE NO.	SH.#
		CMG	.	1 OF 1

RainFlo Fiberglass 6,000 Gallon Rainwater Collection System

RAINFLO®
RainHarvest Systems LLC.
4475 Alicia Lane
Cumming, GA 30028
Tel: 770-889-2533 Fax: 770-889-2577