REVISIONS			
REV	DESCRIPTION	DATE	APPROVED

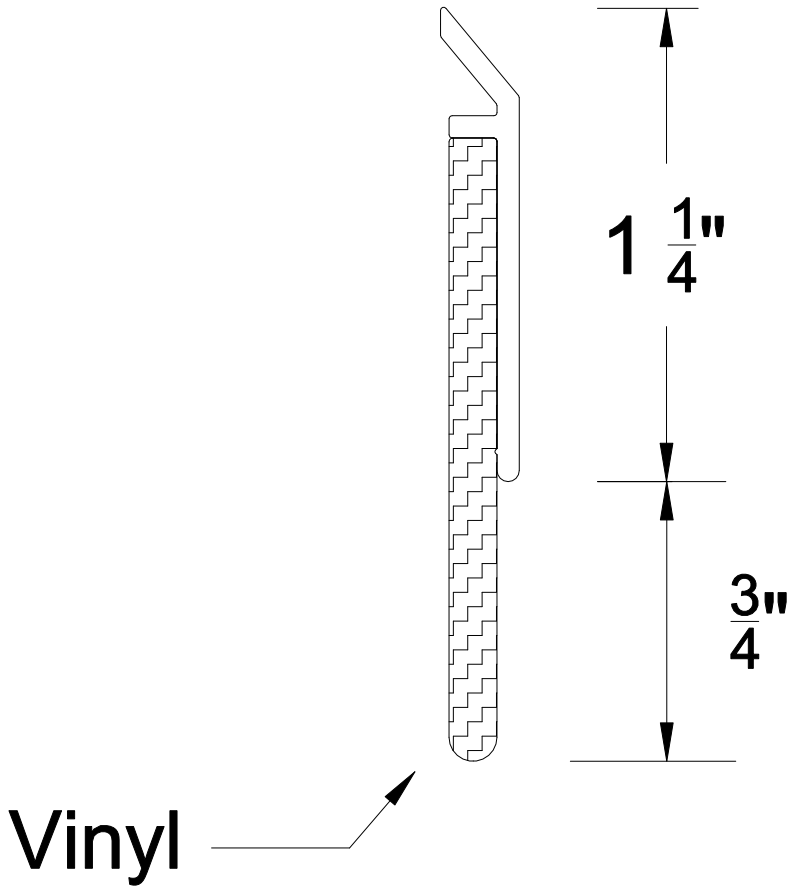

Reese WEATHERSTRIPS & THRESHOLDS		PART NO. 377
DATE 9/29/17	DRAWN BY PJK	APPROVED
SCALE 2:1	INSERT MATERIAL VINYL	ALUMINUM ALLOY 6063 T-5