REVISIONS			
REV	DESCRIPTION	DATE	APPROVED

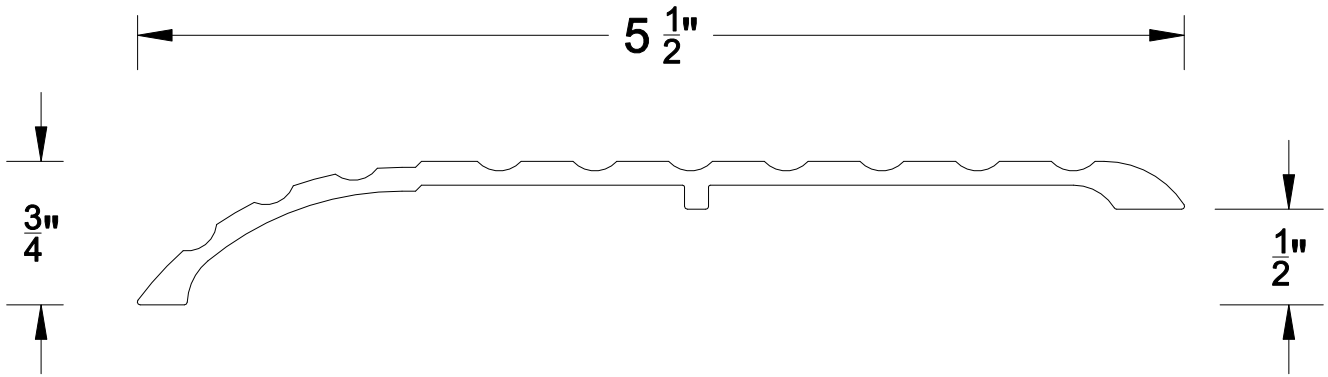

Reese WEATHERSTRIPS & THRESHOLDS		PART NO. S512
DATE 2/20/18	DRAWN BY PJK	APPROVED
SCALE 1:1	INSERT MATERIAL N/A	ALUMINUM ALLOY 6063 T-5