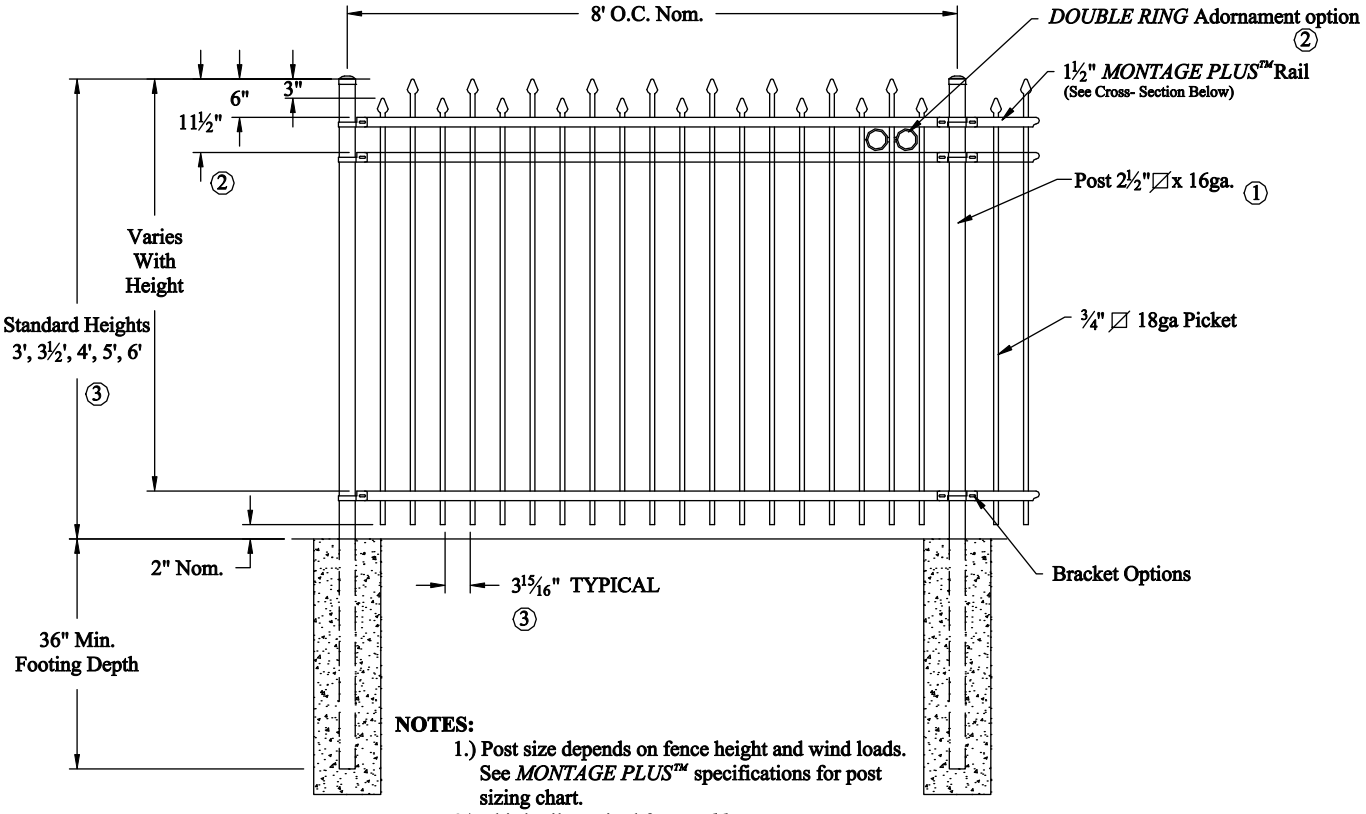

NOTES:

1.) Post size depends on fence height and wind loads. See *MONTAGE PLUS™* specifications for post sizing chart.
2.) Third rail required for *Double Rings*.
3.) Available in 3" air space and/or Flush Bottom on most heights.

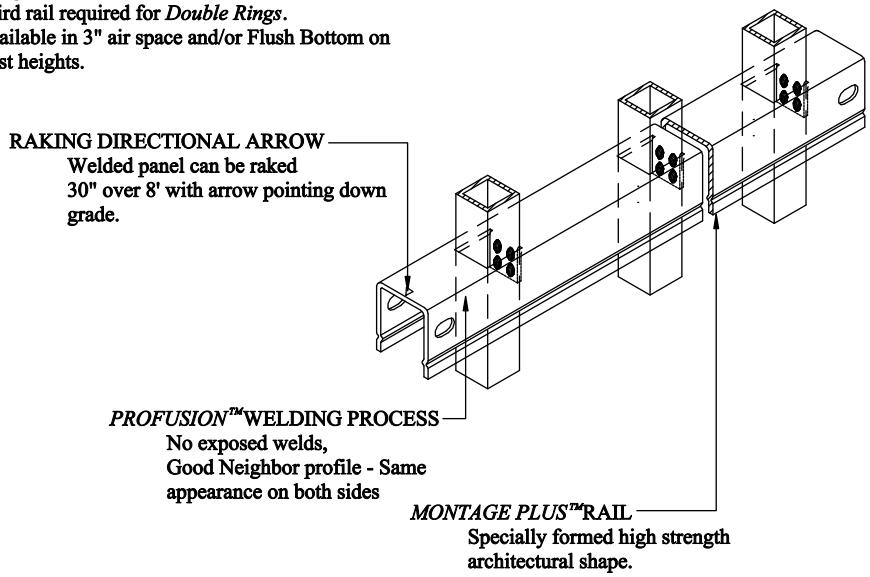

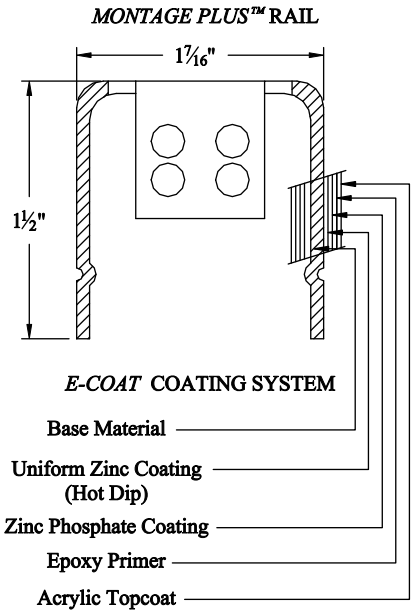

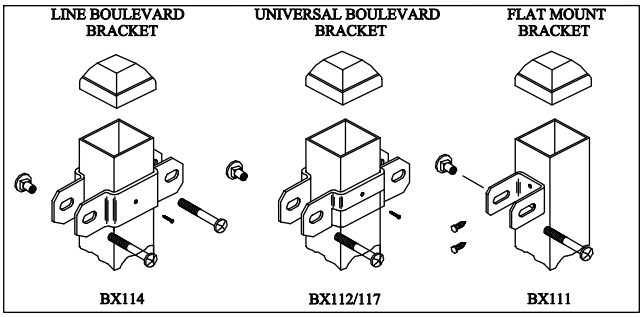

COMMERCIAL STRENGTH WELDED STEEL PANEL

PRE-ASSEMBLED

1RCISO

Title: MONTAGE PLUS WARRIOR 2/3-RAIL		
DR: CI	SH . 1of 1	SCALE: DO NOT SCALE
CK: PB	Date 7/20/09	REV: b

AMERISTAR®
1555 N. Mingo
Tulsa, OK 74116
1-888-333-3422
www.ameristarfence.com