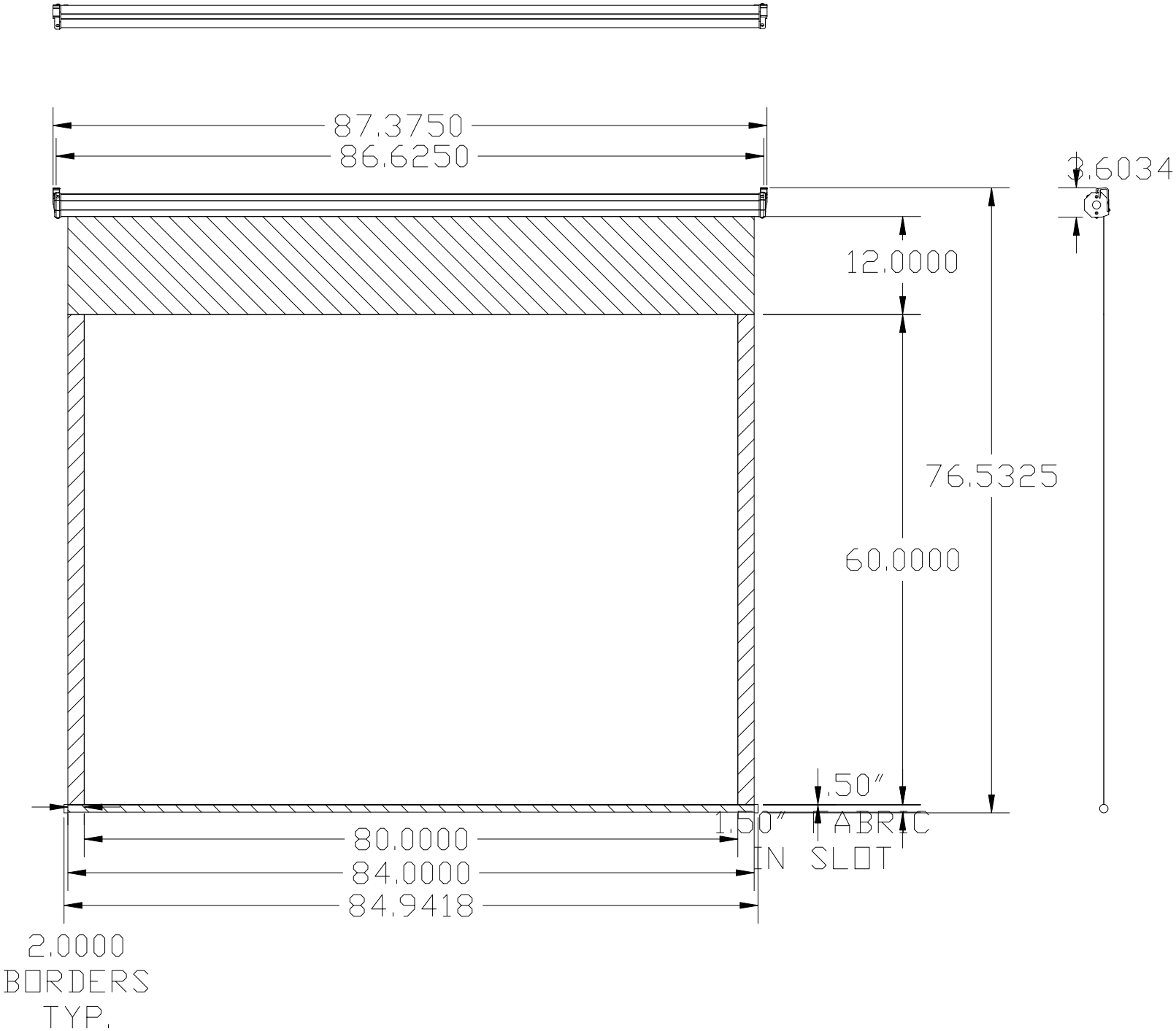

NOTES:
BLK = TOTAL BLACK DROP AT TOP
VAH = VIEWING AREA HEIGHT
VAW = VIEWING AREA WIDTH