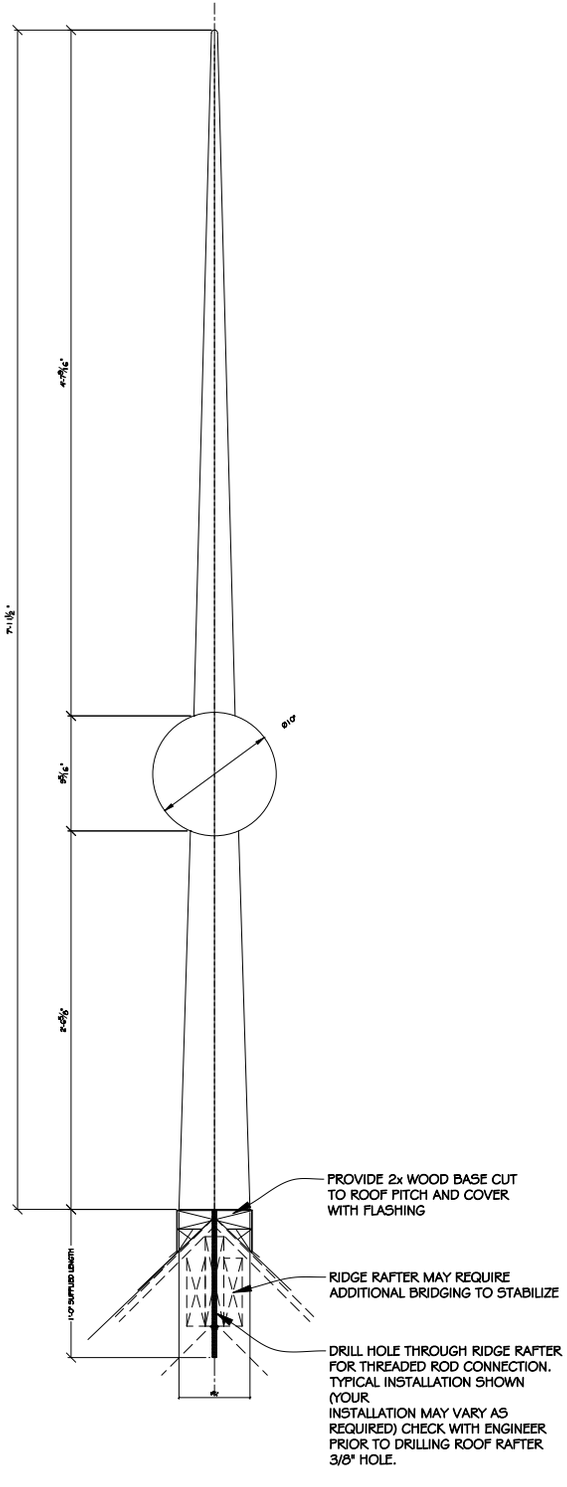
7'-1 1/2"
4'-7 9/16"
8 1/2"
8 1/16"
2'-8 7/8"
1'-0" SUPPLIED LENGTH
PROVIDE 2x WOOD BASE CUT TO ROOF PITCH AND COVER WITH FLASHING
RIDGE RAFTER MAY REQUIRE ADDITIONAL BRIDGING TO STABILIZE
DRILL HOLE THROUGH RIDGE RAFTER FOR THREADED ROD CONNECTION. TYPICAL INSTALLATION SHOWN (YOUR INSTALLATION MAY VARY AS REQUIRED) CHECK WITH ENGINEER PRIOR TO DRILLING ROOF RAFTER 3/8" HOLE.

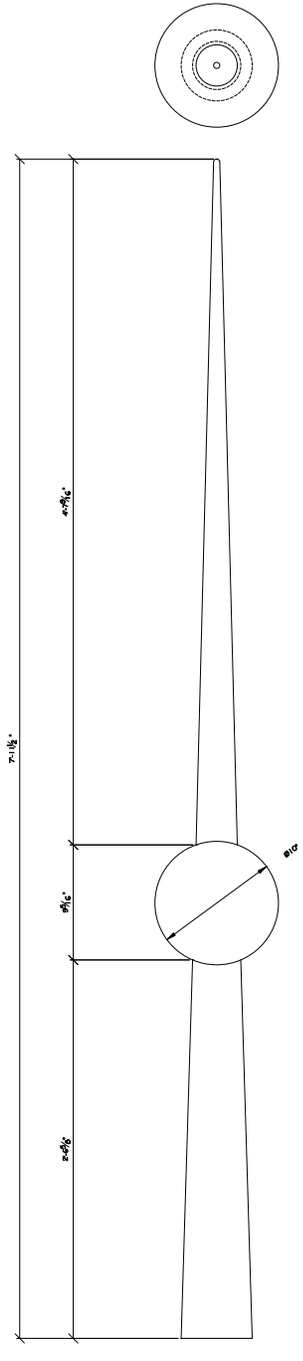
7'-1 1/2"
4'-7 9/16"
8 1/2"
8 1/16"
2'-8 7/8"