TOOL BOX	1	2	HURCO DIMS	1	2	3	CUT LIST		QTY PER		LATEST PRINT		DRG. NO.		SHT. 1 of 1	REV.

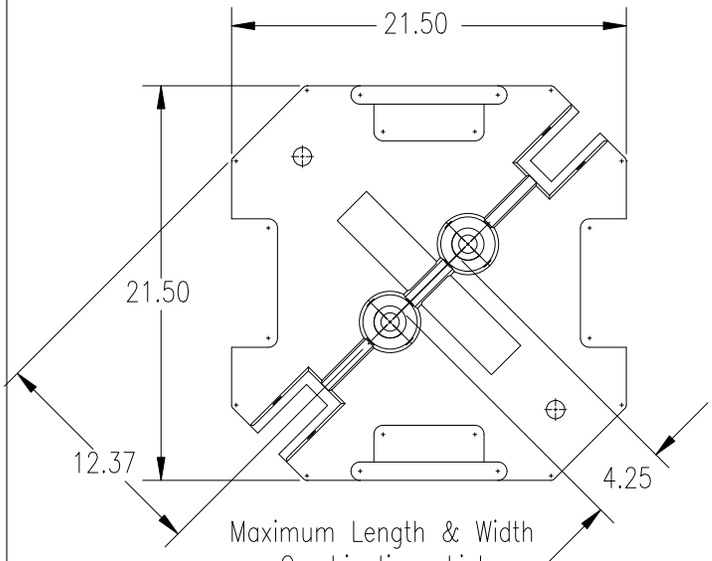

Maximum Length & Width Combinations List

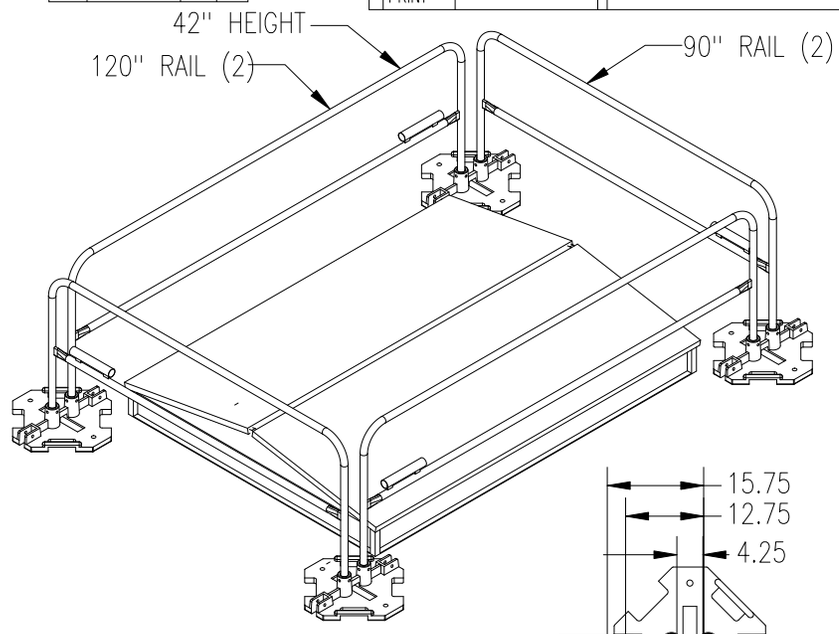

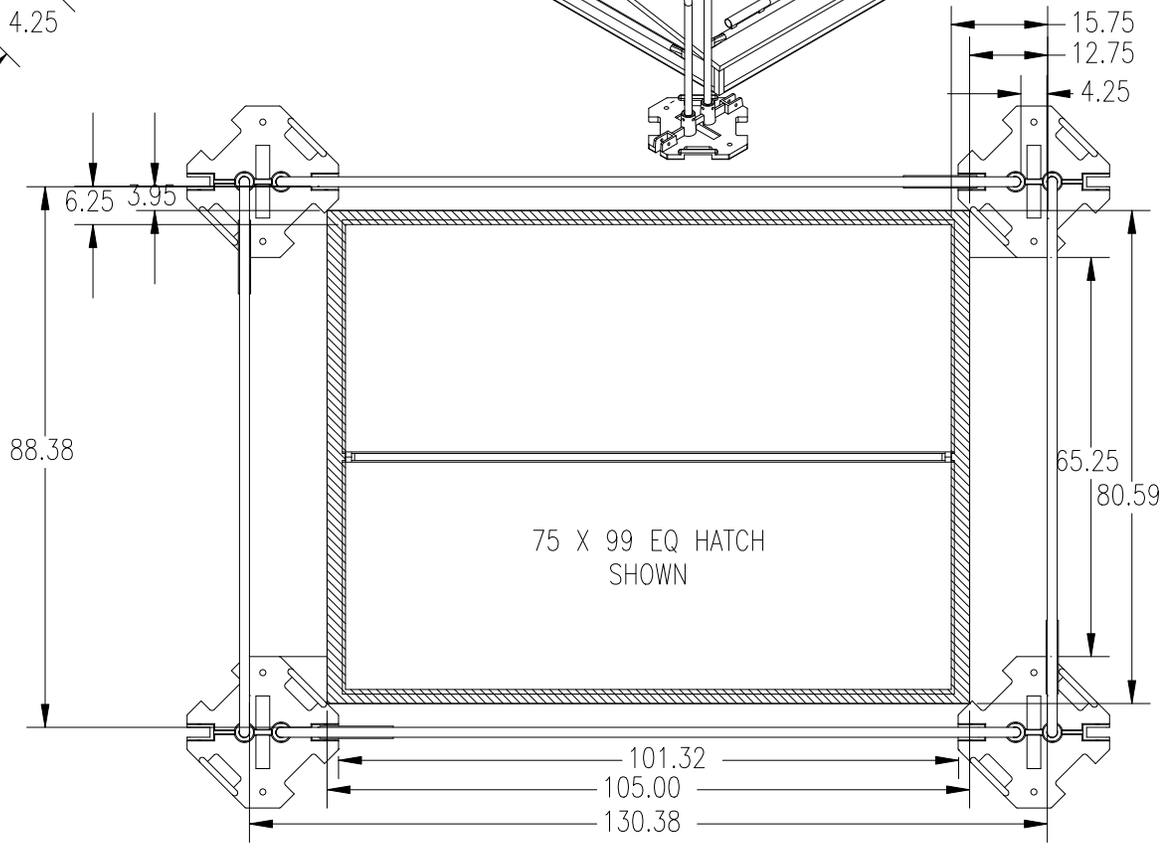

REVISION BLOCK			
L	DESCRIPTION OF REVISION	DATE/#	

MAT'L DESC. –
MAT'L NO. –
PART WGT.
BLANK QTY. –
PART FINISH NONE

FRONT R. SIDE

TOLERANCES U.O.S.
FRAC 1/64
0.00 0.01
0.000 0.005
ANGLE 0.50

DWN. CDS DATE 8/29/2003

GARLOCK EQUIPMENT CO.

Copyright GARLOCK EQUIPMENT CO. 1997

90 X 120 Equip Hatch

SIZE B

SCALE 1:8

DO NOT SCALE DRAWING

THIS DOCUMENT CONTAINS CONFIDENTIAL PROPRIETARY INFORMATION OF GARLOCK EQUIPMENT CO. AND IS NOT TO BE DISCLOSED TO OTHERS