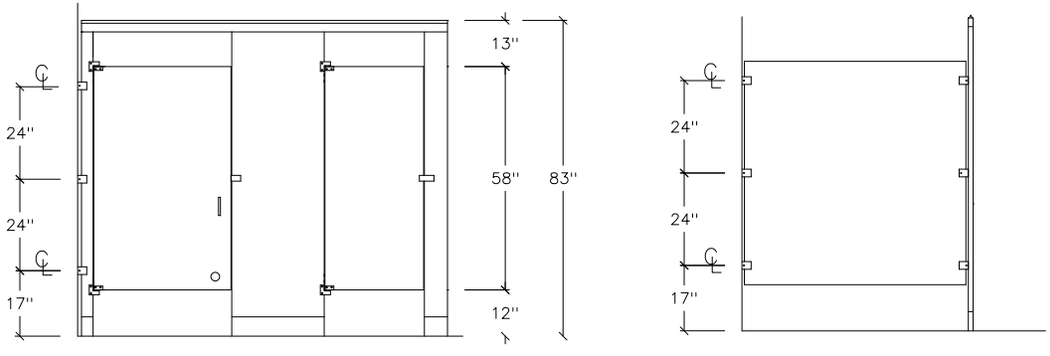

EMBASSY OVERHEAD BRACED POLYMER VAULT HINGE ELEVATIONS

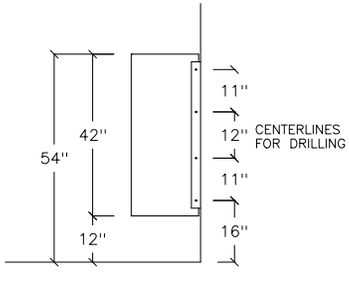

GLOBAL STEEL PRODUCTS CORP.

95 MARCUS BLVD. DEER PARK L.I., N.Y. 11729

MATERIAL TYPE: POLYMER

- ☐ BANK VAULT HINGES

COLOR:

HARDWARE:

- ☐ CHROME PLATED DIE CAST ALUMINUM ALLOY DOOR HARDWARE, BRUSHED FINISH.
- ☐ ANODIZED ALUMINUM BRACKETS (3) PER CONNECTION

DOOR LATCH:

- ☐ SLIDE LATCH

TARGET PLOT SCALE: 1/2" = 1'-0'