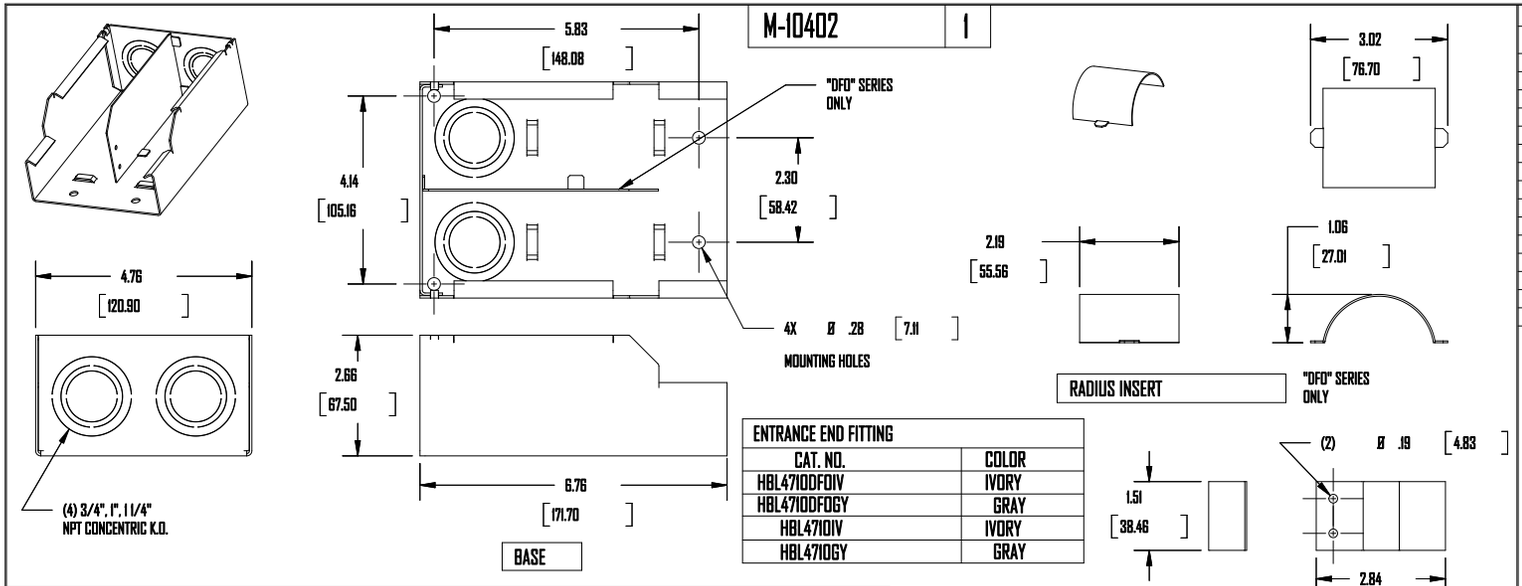

ENTRANCE END FITTING	
CAT. NO.	COLOR
HBL4710DFOIV	IVORY
HBL4710DFOGY	GRAY
HBL4710IV	IVORY
HBL4710GY	GRAY

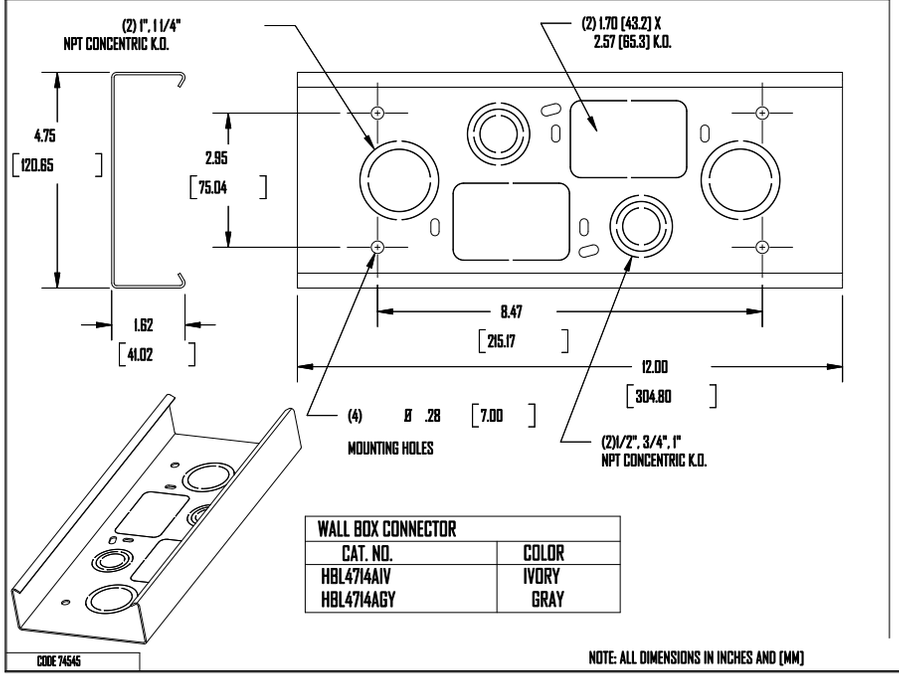

WALL BOX CONNECTOR	
CAT. NO.	COLOR
HBL4714AIV	IVORY
HBL4714AGY	GRAY

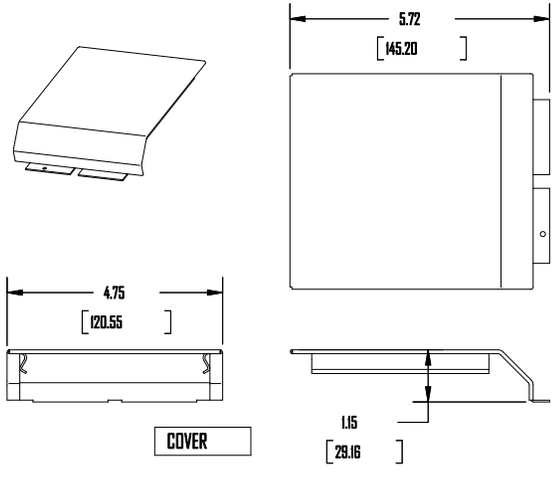

CODE 74545

NOTE: ALL DIMENSIONS IN INCHES AND [MM]

LIST OF PARTS

DESCRIPTION	MATERIAL	FINISH
BASE	STEEL	PAINTED
RADIUS INSERT	STEEL	PAINTED
BARRIER	STEEL	PAINTED
DIVIDER	STEEL	PAINTED
COVER	STEEL	PAINTED

DIMENSION SHEET FOR CAT. NO.

SEE TABLE

REPAIRABLE ☐ NON-REPAIRABLE ☒

SYM	REVISIONS	APP	DATE
1	RELEASED PER DCN 13554	SRE	11/15/06

THE DESIGN AND DIMENSIONS OF THE PRODUCT SHOWN ON THIS DRAWING ARE SUBJECT TO CHANGE WITHOUT NOTICE

TITLE

ENTRANCE END FITTING
HBL4750 SERIES

TOLERANCES UNLESS OTHERWISE SPECIFIED

FRACTIONS	± 1/64
DECIMALS	± .005
ANGLES	± 2 °

WIRING DEVICE-KELLEMS
HUBBELL INCORPORATED
BRIDGEPORT, CT

DR. BY	SRE	APP. BY	SRE
TR. BY		SCALE	1:1
CHK'D BY	SRE	DATE	11/15/06

B

M-10402

1