M-10408 | 1

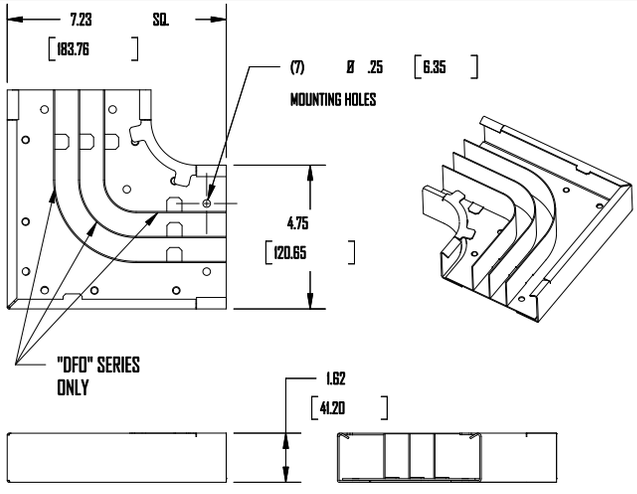


BASE ASSY.

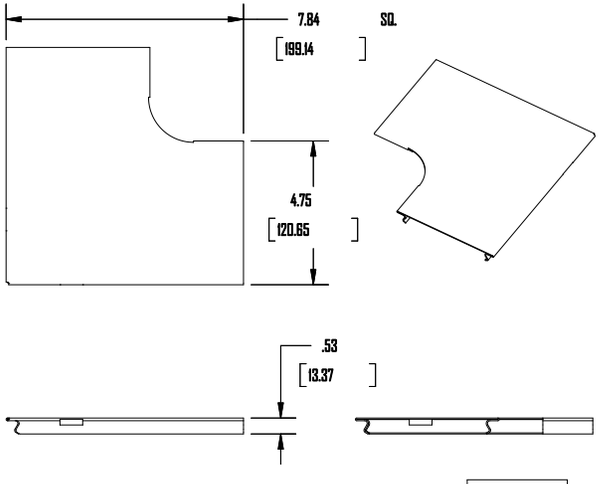


COVER

| FLAT ELBOW | |
|---|---|
| CAT. NO. | COLOR |
| HBL4711DFOIV | IVORY |
| HBL4711DFOGY | GRAY |
| HBL4711IV | IVORY |
| HBL4711GY | GRAY |

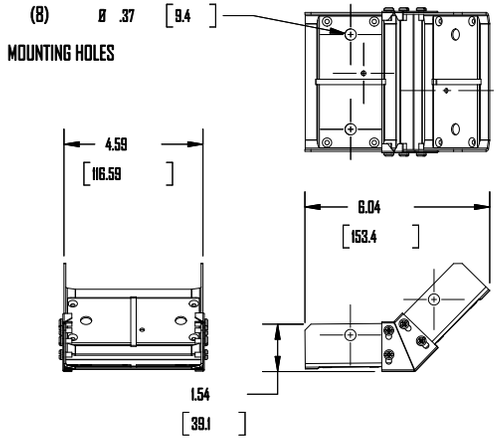


| INTERNAL OR EXTERNAL 45° ELBOW | |
|---|---|
| CAT. NO. | COLOR |
| HBL4712TXIV | IVORY |
| HBL4712TXGY | GRAY |

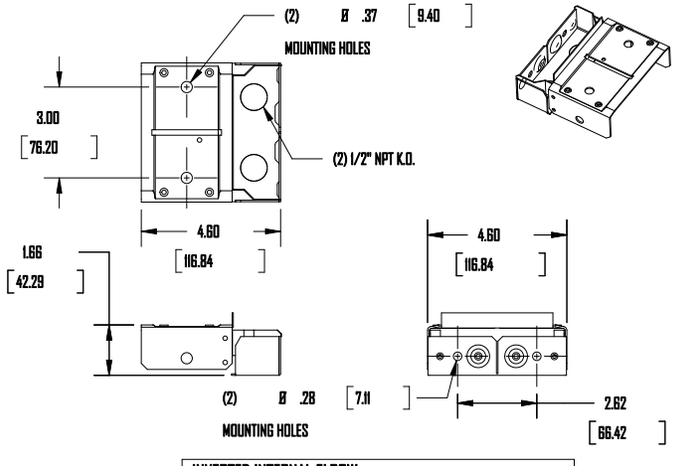


| INVERTED INTERNAL ELBOW | |
|---|---|
| CAT. NO. | COLOR |
| HBL4717NIV | IVORY |
| HBL4717NGY | GRAY |

NOTE: ALL DIMENSIONS ARE IN INCHES AND [MM]

CODE 74545

| LIST OF PARTS | | |
|---|---|---|
| DESCRIPTION | MATERIAL | FINISH |
| BASE ASSY | STEEL | PAINTED |
| COVER | STEEL | PAINTED |
| INTERNAL/EXTERNAL ELBOW | STEEL | PAINTED |
| INVERTED INTERNAL ELBOW | STEEL | PAINTED |

DIMENSION SHEET FOR CAT. NO.

SEE TABLE

REPAIRABLE ☐ NON-REPAIRABLE ☒

| SYM | REVISIONS | APP | DATE |
|---|---|---|---|
| 1 | RELEASED PER DCN 13554 | SRE | 11/15/06 |

THE DESIGN AND DIMENSIONS OF THE PRODUCT SHOWN ON THIS DRAWING ARE SUBJECT TO CHANGE WITHOUT NOTICE

TITLE FLAT, INTERNAL/EXTERNAL & INVERTED ELBOWS HBL4750 SERIES

TOLERANCES UNLESS OTHERWISE SPECIFIED
FRACTIONS ± 1/64
DECIMALS ± .005
ANGLES ± 2 °

WIRING DEVICE-KELLEMS
HUBBELL INCORPORATED
BRIDGEPORT, CT

| | | | |
|---|---|---|---|
| DR. BY | SRE | APP. BY | SRE |
| TR. BY | | SCALE | 1:1 |
| CHK'D BY | SRE | DATE | 11/15/06 |

B

M-10408

1