M-10409 | 1

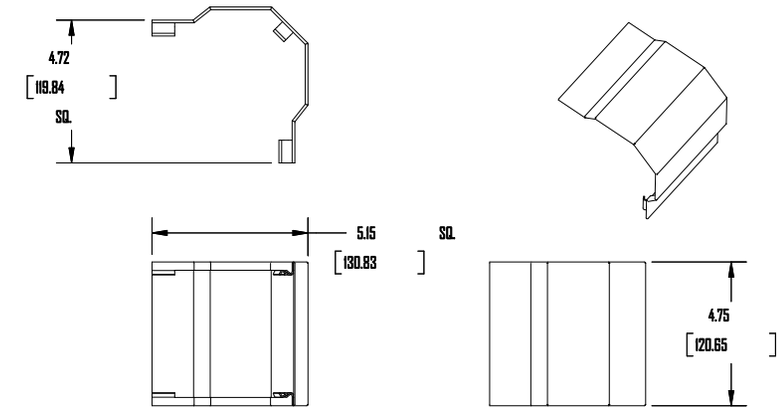

COVER

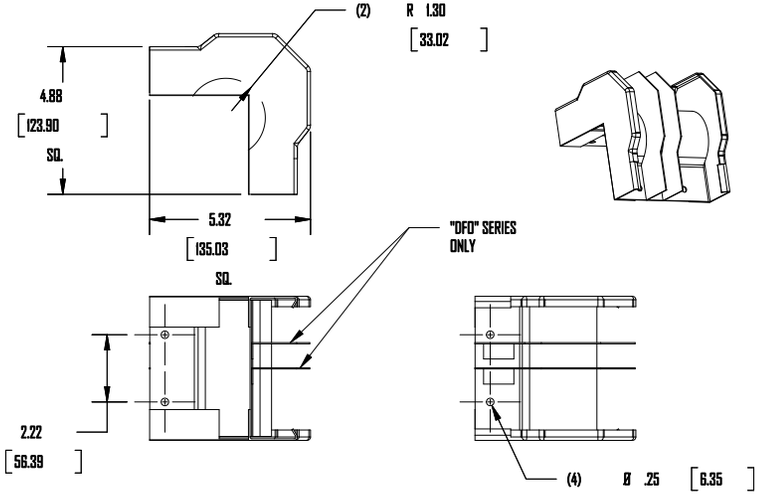

BASE ASSY.

EXTERNAL ELBOW	
CAT. NO.	COLOR
HBL4718DFOIV	IVORY
HBL4718DFOGY	GRAY
HBL4718IV	IVORY
HBL4718GY	GRAY

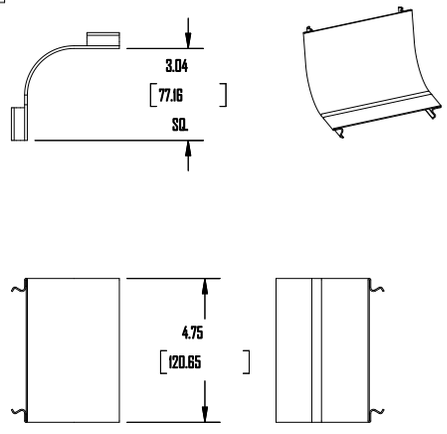

COVER

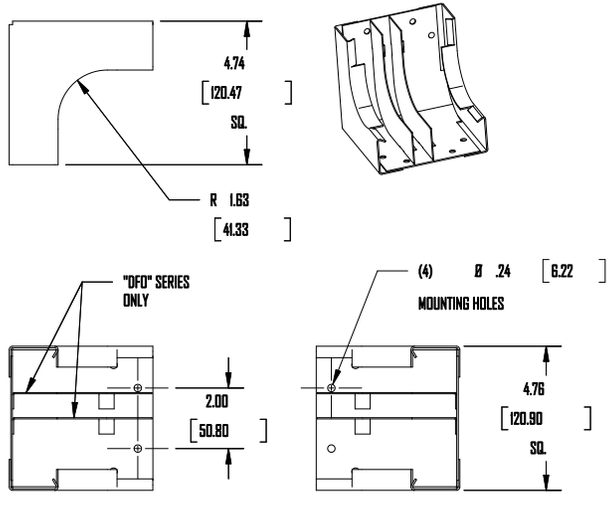

BASE ASSY.

INTERNAL ELBOW	
CAT. NO.	COLOR
HBL4717DFOIV	IVORY
HBL4717DFOGY	GRAY
HBL4717IV	IVORY
HBL4717GY	GRAY

NOTE: ALL DIMENSIONS IN INCHES AND [MM]

CODE 74545

LIST OF PARTS

DESCRIPTION	MATERIAL	FINISH
BASE ASSY.	STEEL	PAINTED
COVER	STEEL	PAINTED

DIMENSION SHEET FOR CAT. NO. SEE TABLE

REPAIRABLE ☐ NON-REPAIRABLE ☒

SYM	REVISIONS	APP	DATE
1	RELEASED PER DCN 13554	SRE	11/16/06

THE DESIGN AND DIMENSIONS OF THE PRODUCT SHOWN ON THIS DRAWING ARE SUBJECT TO CHANGE WITHOUT NOTICE

TITLE INTERNAL/EXTERNAL ELBOWS HBL4750 SERIES

TOLERANCES UNLESS OTHERWISE SPECIFIED
FRACTIONS ± 1/64
DECIMALS ± .005
ANGLES ± 2 °

WIRING DEVICE-KELLEMS
HUBBELL INCORPORATED
BRIDGEPORT, CT

DR. BY	SRE	APP. BY	SRE
TR. BY		SCALE	1:1
CHK'D BY	SRE	DATE	11/16/06

B M-10409 1