M-10411 | 1

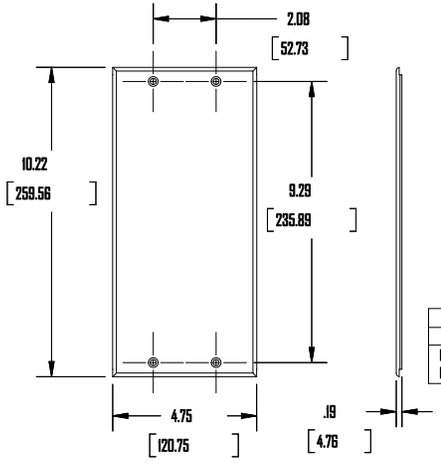

4 GANG DEVICE PLATE
TYPICAL DIMENSIONS

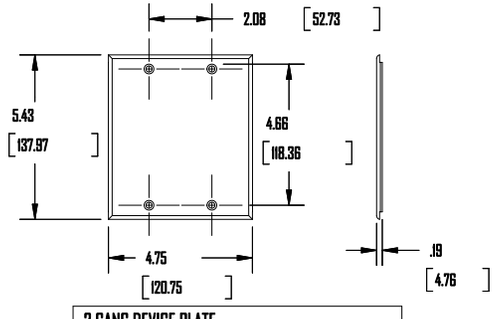

2 GANG DEVICE PLATE
TYPICAL DIMENSIONS

2 DUPLEX-2 MOD. FURN.	
CAT. NO.	COLOR
HBL47472BBFFIV	IVORY
HBL47472BBFFGY	GRAY

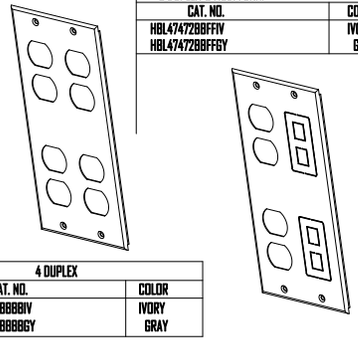

2 DUPLEX-2 BLANK	
CAT. NO.	COLOR
HBL47472BBXXIV	IVORY
HBL47472BBXXGY	GRAY

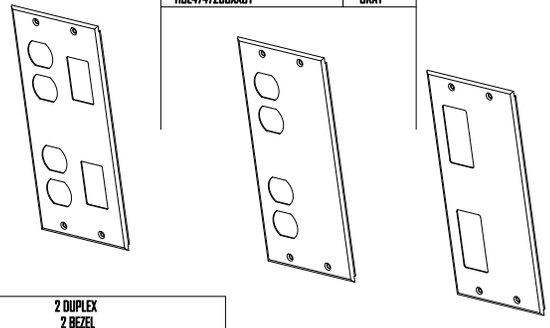

4 DUPLEX	
CAT. NO.	COLOR
HBL47472BBBBIV	IVORY
HBL47472BBBBGY	GRAY

2 DUPLEX 2 BEZEL	
CAT. NO.	COLOR
HBL47472BBSSIV	IVORY
HBL47472BBSSGY	GRAY
HBL47472BBTTIV	IVORY
HBL47472BBTTGY	GRAY

2 STYLE LINE 2 BLANK	
CAT. NO.	COLOR
HBL47472RRXXIV	IVORY
HBL47472RRXXGY	GRAY

4 GANG OVERLAP COVERS

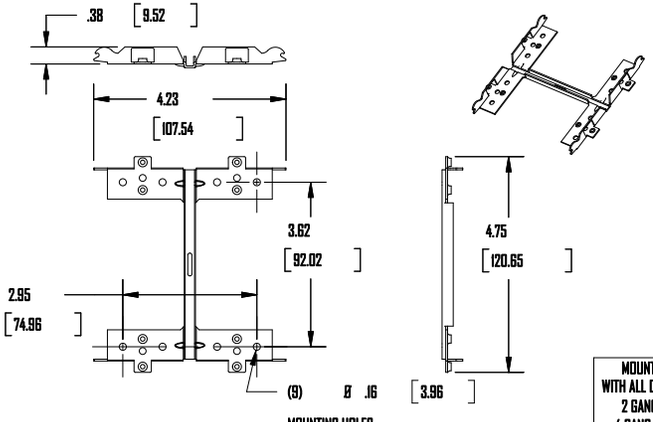

1 DUPLEX 1 STYLE LINE	
CAT. NO.	COLOR
HBL4747BRIV	IVORY
HBL4747BRGY	GRAY

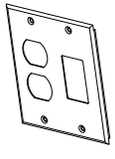

MOUNTING BRACKETS SUPPLIED
WITH ALL DEVICE PLATE MODELS:
2 GANG, 1 BRACKET SUPPLIED
4 GANG, 2 BRACKETS SUPPLIED

1 DUPLEX-1 BLANK	
CAT. NO.	COLOR
HBL4747BXIV	IVORY
HBL4747BXGY	GRAY

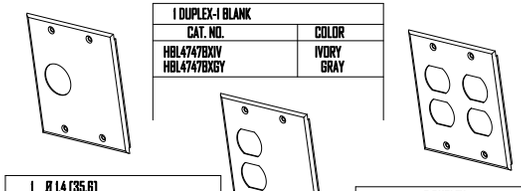

1 DUPLEX-1 MOD. FURN.	
CAT. NO.	COLOR
HBL4747BFIV	IVORY
HBL4747BFGY	GRAY

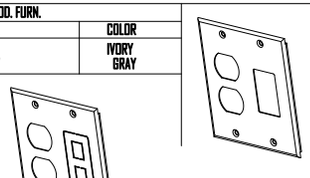

1 Ø 1.6 [40.6] 1 BLANK	
CAT. NO.	COLOR
HBL4747JXIV	IVORY
HBL4747JXGY	GRAY

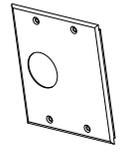

1 STYLE LINE 1 MOD. FURN.	
CAT. NO.	COLOR
HBL4747RFIV	IVORY
HBL4747RFGY	GRAY

1 Ø 1.4 [35.6] 1 BLANK	
CAT. NO.	COLOR
HBL4747AXIV	IVORY
HBL4747AXGY	GRAY

2 DUPLEX	
CAT. NO.	COLOR
HBL4747BBIV	IVORY
HBL4747BBGY	GRAY

2 GANG OVERLAP COVERS

1 DUPLEX 1 BEZEL	
CAT. NO.	COLOR
HBL4747BSIV	IVORY
HBL4747BSGY	GRAY
HBL4747BTIV	IVORY
HBL4747BTGY	GRAY

1 STYLE LINE 1 BLANK	
CAT. NO.	COLOR
HBL4747RXIV	IVORY
HBL4747RXGY	GRAY

NOTE: ALL DIMENSIONS IN INCHES AND [MM]

CODE 74545

LIST OF PARTS

DESCRIPTION	MATERIAL	FINISH
COVER PLATE	STEEL	PAINTED
MOUNTING BRACKET	STEEL	GALVANIZED

DIMENSION SHEET FOR CAT. NO. SEE TABLE

REPLACABLE ☐ NON-REPLACABLE ☒

SYM	REVISIONS	APP	DATE
1	RELEASED PER DCN 13554	SRE	11/16/06

THE DESIGN AND DIMENSIONS OF THE
PRODUCT SHOWN ON THIS DRAWING ARE
SUBJECT TO CHANGE WITHOUT NOTICE

TITLE 2 & 4 GANG COVER PLATE
HBL4750 SERIES

TOLERANCES UNLESS OTHERWISE SPECIFIED
FRACTIONS ±1/64
DECIMALS ±.005
ANGLES ±2°

WIRING DEVICE-KELLEMS
HUBBELL INCORPORATED
BRIDGEPORT, CT

DR. BY	SRE	APP. BY	SRE
TR. BY		SCALE	1:1
CHK'D BY	SRE	DATE	11/16/06

B M-10411 1