M-10400 | 1

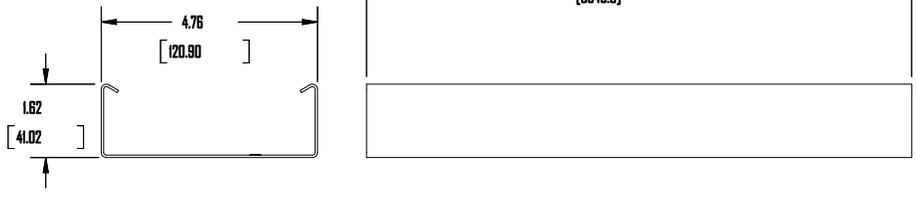


| RACEWAY BASE | |
|---|---|
| CAT. NO. | COLOR |
| HBL4750B10IV | IVORY |
| HBL4750B10GY | GRAY |

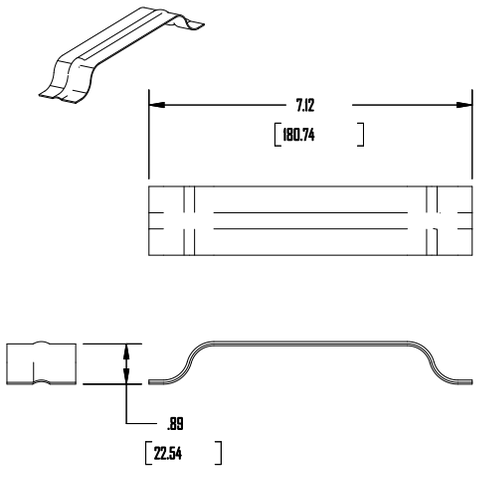


| BYPASS | |
|---|---|
| CAT. NO. | COLOR |
| HBL4750BP | IVORY |

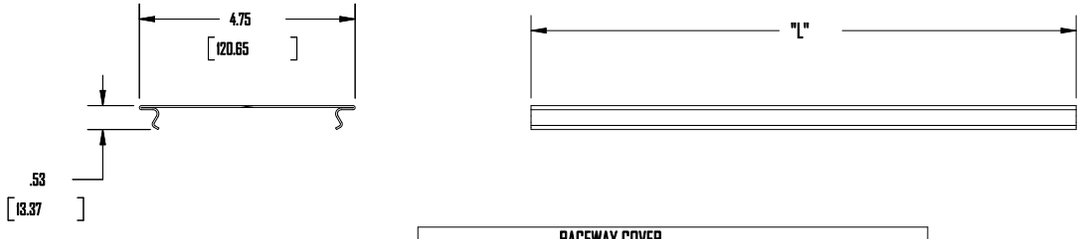


| RACEWAY COVER | | |
|---|---|---|
| CAT. NO. | "L" | COLOR |
| HBL4750C1V<br>HBL4750C1GY | 60"<br>[1524.0] | IVORY<br>GRAY |
| HBL4750C075IV<br>HBL4750C075GY | 7.5"<br>[190.50] | IVORY<br>GRAY |
| HBL4750C135IV<br>HBL4750C135GY | 13.5"<br>[342.9] | IVORY<br>GRAY |
| HBL4750C195IV<br>HBL4750C195GY | 19.5"<br>[495.3] | IVORY<br>GRAY |
| HBL4750C315IV<br>HBL4750C315GY | 31.5"<br>[800.1] | IVORY<br>GRAY |

NOTE: ALL DIMENSIONS IN INCHES AND [MM]

CODE 74545

LIST OF PARTS

| DESCRIPTION | MATERIAL | FINISH |
|---|---|---|
| RACEWAY BASE | STEEL | PAINTED |
| RACEWAY COVER | STEEL | PAINTED |
| BYPASS | STEEL | PAINTED |

| SYM | REVISIONS | APP | DATE |
|---|---|---|---|
| 1 | RELEASED PER DCN13554 | SRE | 11/15/06 |

THE DESIGN AND DIMENSIONS OF THE PRODUCT SHOWN ON THIS DRAWING ARE SUBJECT TO CHANGE WITHOUT NOTICE

TITLE

METAL RACEWAYS
HBL4750 SERIES

TOLERANCES UNLESS OTHERWISE SPECIFIED
FRACTIONS ±1/64
DECIMALS ±.005
ANGLES ±2°

WIRING DEVICE-KELLEMS
HUBBELL INCORPORATED
BRIDGEPORT, CT

| | | | |
|---|---|---|---|
| DR. BY | SRE | APP. BY | SRE |
| TR. BY | | SCALE | H |
| CHK'D BY | SRE | DATE | 11/15/06 |

DIMENSION SHEET FOR CAT. NO. SEE TABLE

REPAIRABLE ☐ NON-REPAIRABLE ☒

B

M-10400

1