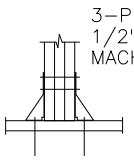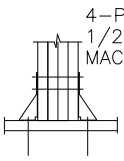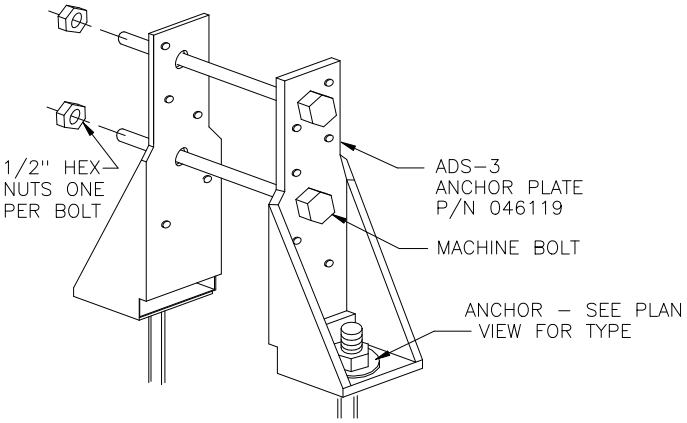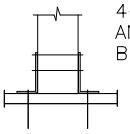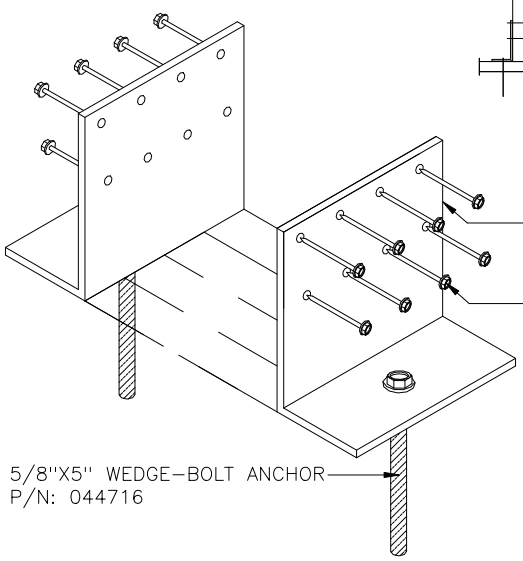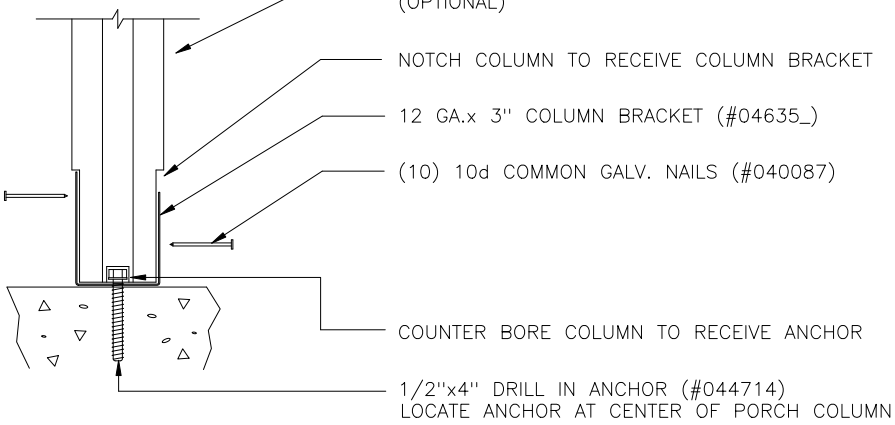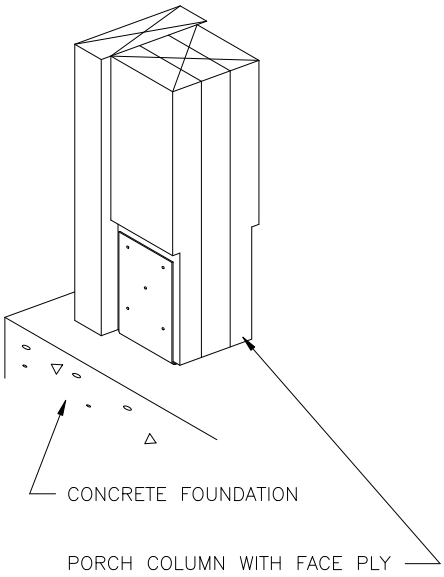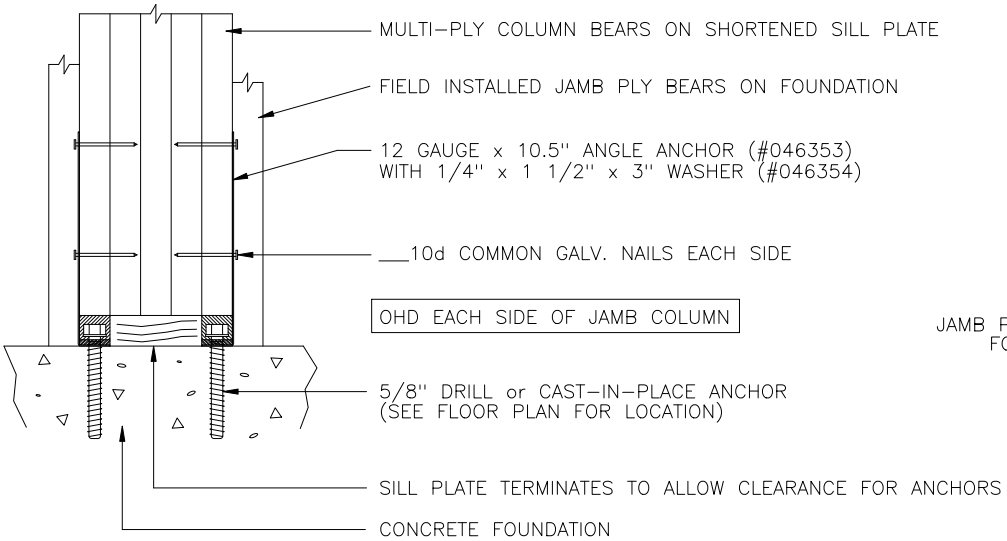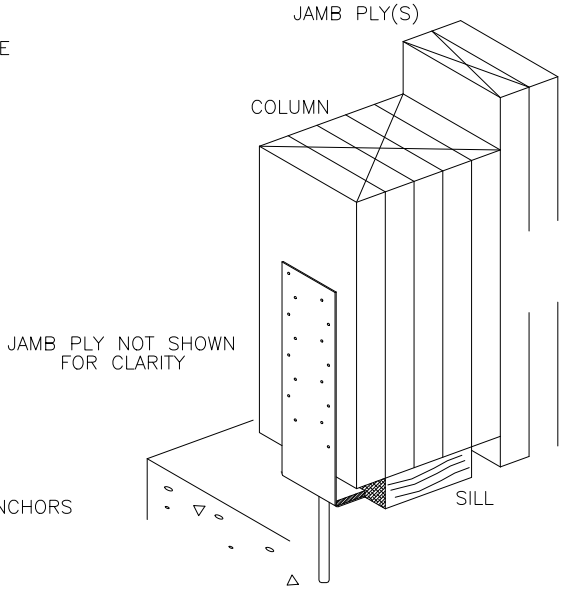Column to Concrete Connections