## PLAN VIEW

NOT TO SCALE

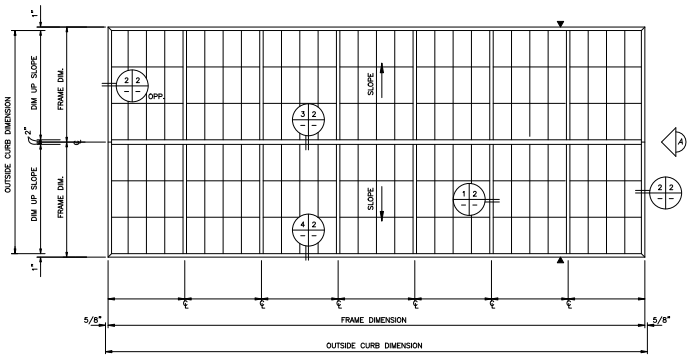


THERMALLY BROKEN PERIMETER FRAMING

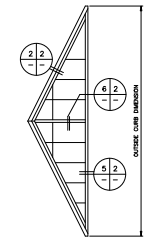


A ENDWALL VIEW

▶ INDICATES 1/4" EXPANSION JOINT (TYP.) (LENGTHS > 24'-0")

MAJOR INDUSTRIES INC.
7120 STEWART AVENUE
WAUSAU, WI 54401
P.O. BOX 306
WAUSAU, WI 54402-0306
PHONE (715) 842-4616
FAX (715) 848-3336

**GUARDIAN 275 ®**
**RIDGE SKYLIGHT**



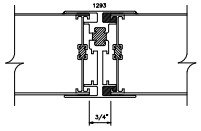


6 2 MULLION DETAIL
SCALE: FULL

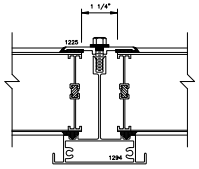


1 2 RAFTER DETAIL
SCALE: FULL

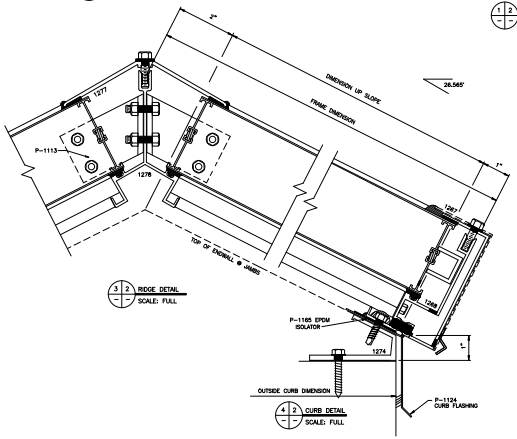


3 2 RIDGE DETAIL
SCALE: FULL

4 2 CURB DETAIL
SCALE: FULL

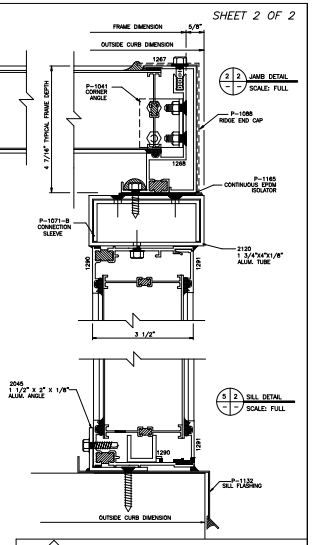


2 2 JAMB DETAIL
SCALE: FULL

5 2 SILL DETAIL
SCALE: FULL

MAJOR INDUSTRIES INC.
7120 STEWART AVENUE
WAUSAU, WI 54401
P.O. BOX 306
WAUSAU, WI 54402-0306
PHONE (715) 842-4616
FAX (715) 848-3336

**GUARDIAN 275 ®**
**RIDGE SKYLIGHT**