SHEET 1 OF 2

PLAN VIEW

NOT TO SCALE

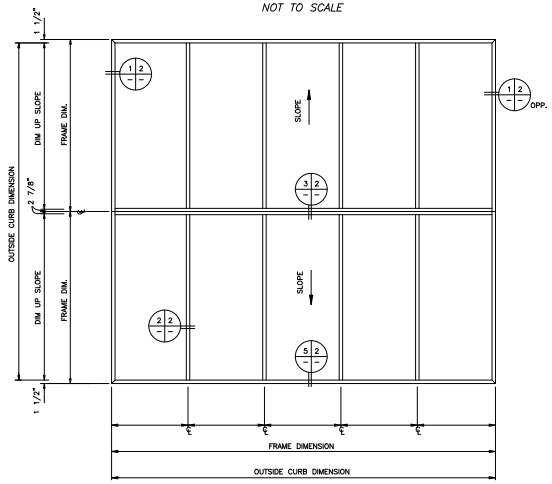

ENDWALLS (2)

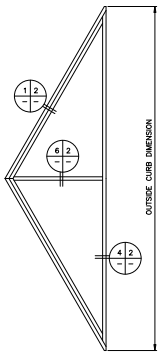

MAJOR INDUSTRIES INC.
7120 STEWART AVENUE
WAUSAU, WI 54401
P.O. BOX 306
WAUSAU, WI 54402-0306
PHONE (715) 842-4616
FAX (715) 848-3336

AUBURN ®
RIDGE SKYLIGHT w/ENDS

SHEET 2 OF 2

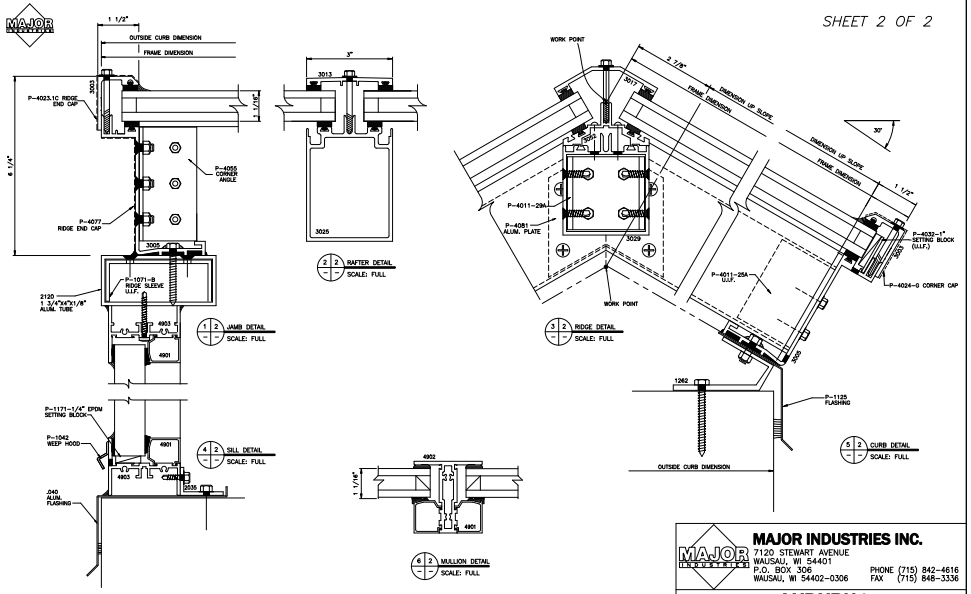

MAJOR INDUSTRIES INC.
7120 STEWART AVENUE
WAUSAU, WI 54401
P.O. BOX 306
WAUSAU, WI 54402-0306
PHONE (715) 842-4616
FAX (715) 848-3336

AUBURN ®
RIDGE SKYLIGHT w/ENDS