SHEET 1 OF 3

PLAN VIEW

NOT TO SCALE

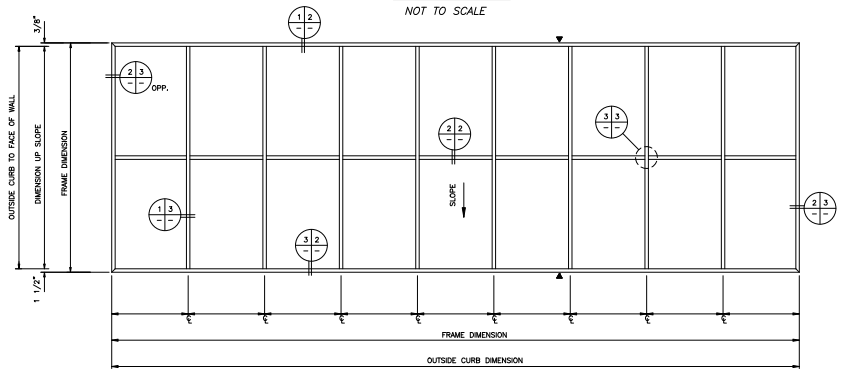

▶ INDICATES 1/4" EXPANSION JOINT (TYP.) (LENGTHS > 24'-0")

MAJOR INDUSTRIES INC.
7120 STEWART AVENUE
WAUSAU, WI 54401
P.O. BOX 306
WAUSAU, WI 54402-0306
PHONE (715) 842-4616
FAX (715) 848-3336

AUBURN ®
SINGLE SLOPE SKYLIGHT

SHEET 2 OF 3

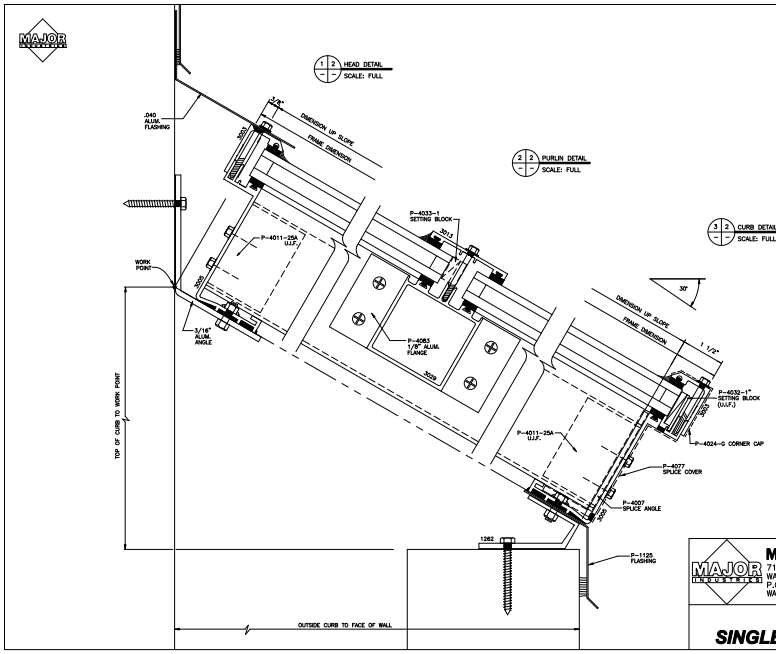

MAJOR INDUSTRIES INC.
7120 STEWART AVENUE
WAUSAU, WI 54401
P.O. BOX 306
WAUSAU, WI 54402-0306
PHONE (715) 842-4616
FAX (715) 848-3336

AUBURN ®
SINGLE SLOPE SKYLIGHT

SHEET 3 OF 3

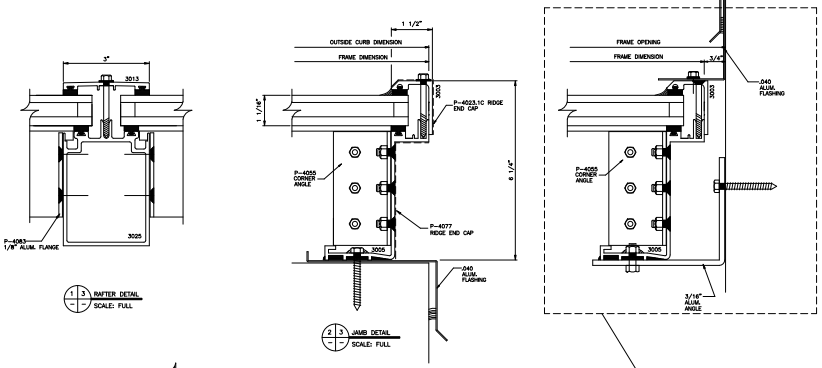

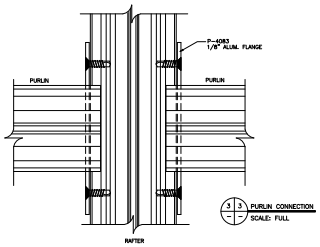

MAJOR INDUSTRIES INC.
7120 STEWART AVENUE
WAUSAU, WI 54401
P.O. BOX 306
WAUSAU, WI 54402-0306
PHONE (715) 842-4616
FAX (715) 848-3336

AUBURN ®
SINGLE SLOPE SKYLIGHT