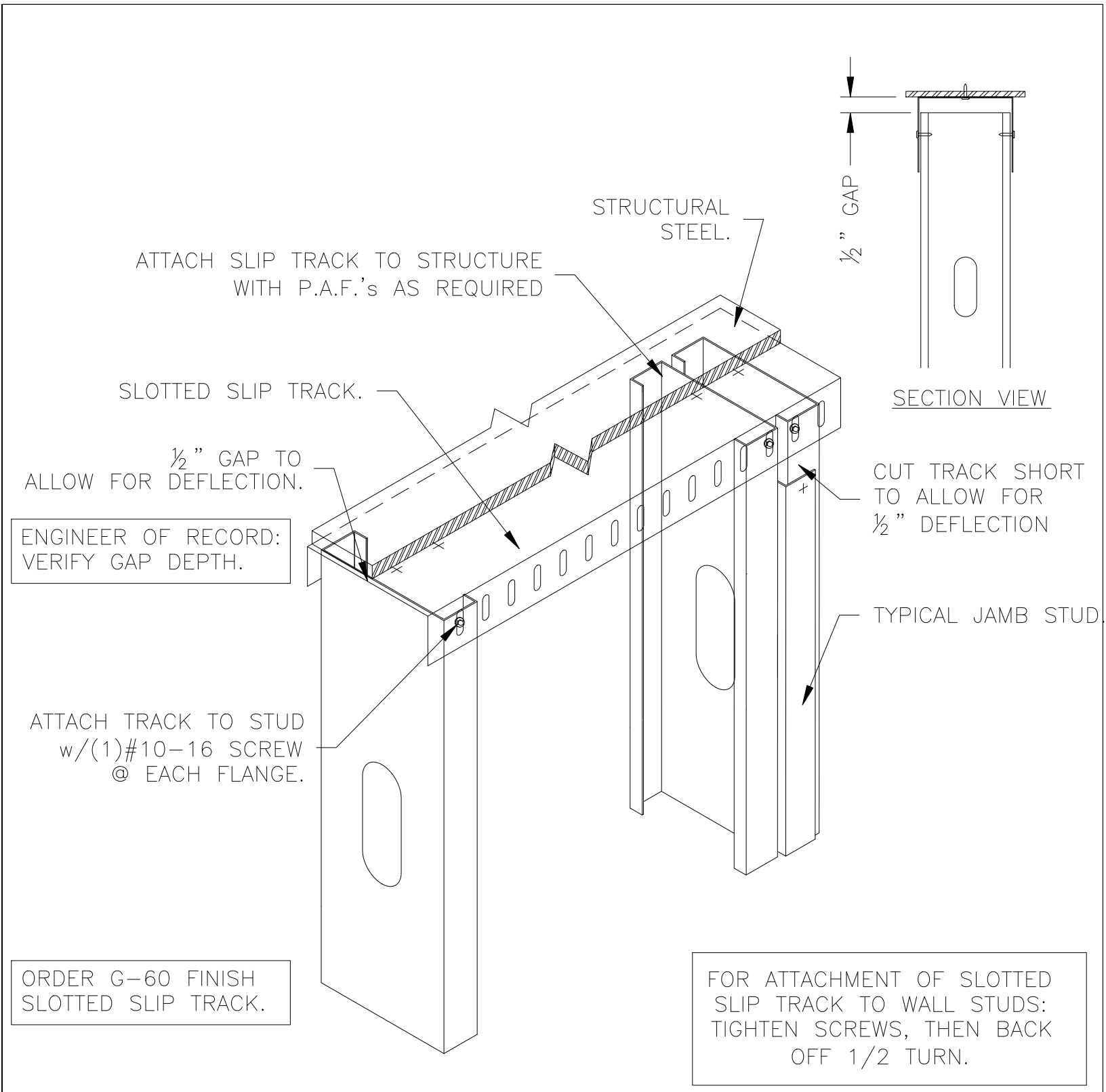

ENGINEER OF RECORD: VERIFY GAP DEPTH.

ORDER G-60 FINISH SLOTTED SLIP TRACK.

FOR ATTACHMENT OF SLOTTED SLIP TRACK TO WALL STUDS: TIGHTEN SCREWS, THEN BACK OFF 1/2 TURN.

SLOTTED SLIP TRACK ASSEMBLY

Marino\WARE

CURTAINWALL DETAIL