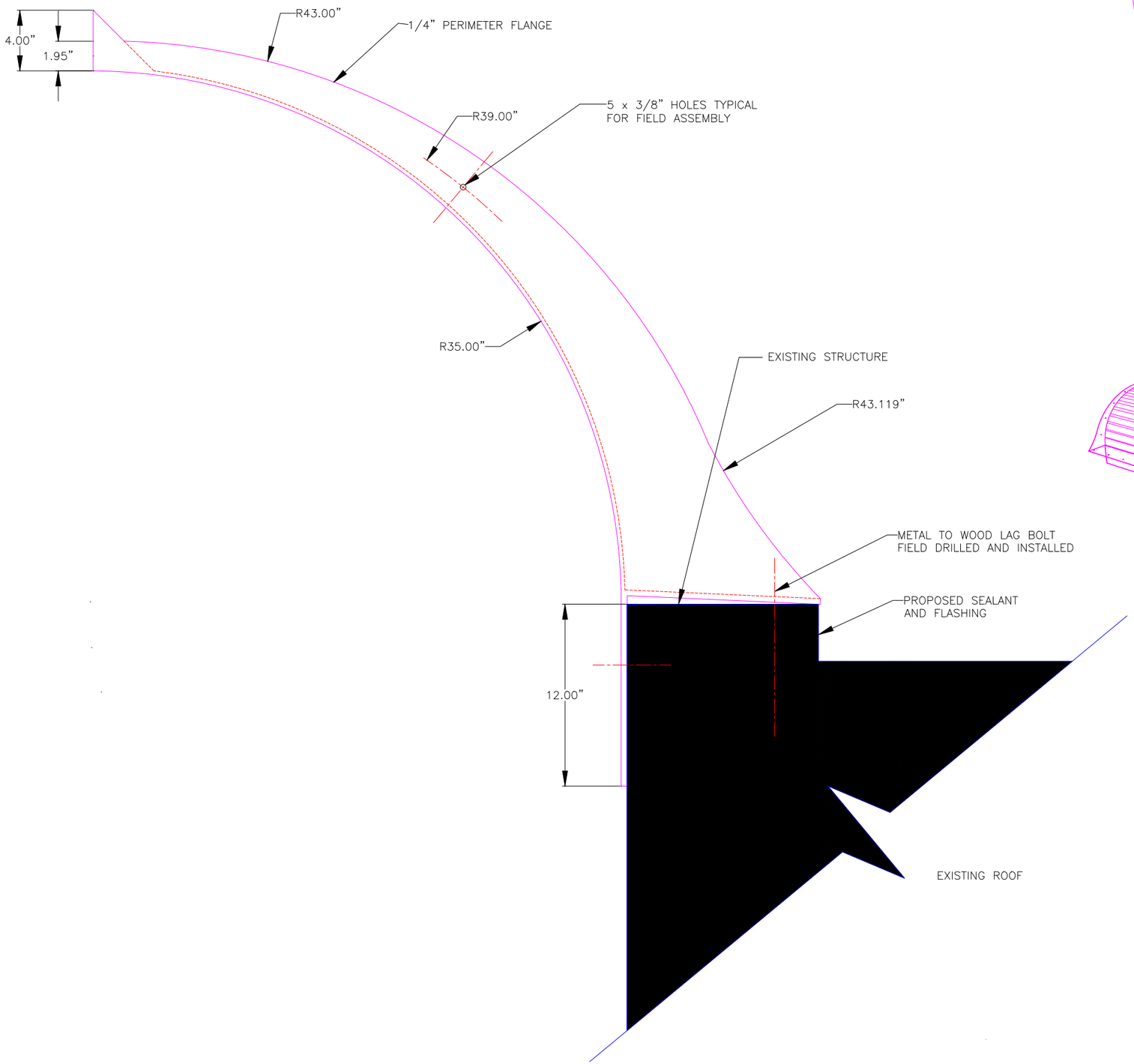


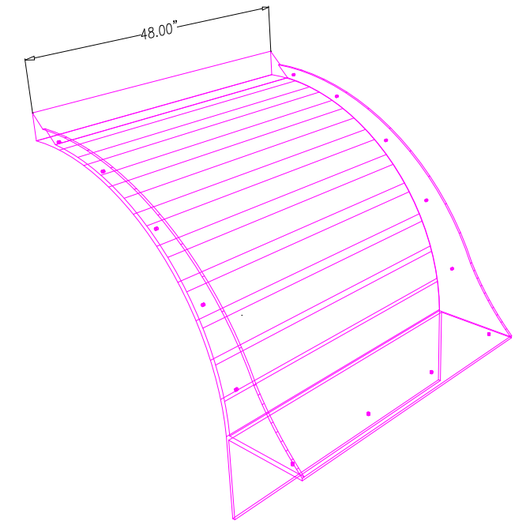


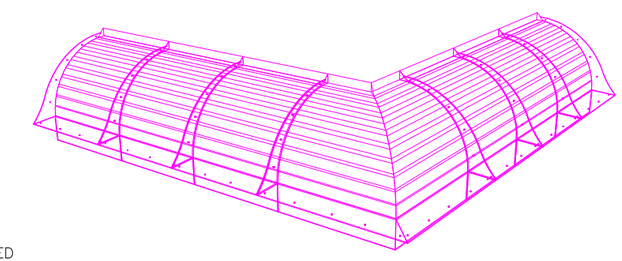

# MAX SECURE
## Detention Products

© 2008 MAX SECURE SYSTEM INC.
CONFIDENTIAL AND PROPRIETARY DOCUMENT
ANY ONE OR MORE OF THE FOLLOWING
PATENTS MAY APPLY
U.S PATENT NO. 5,303,669 5,775,835
6,449,790 AND 6,895,622 B2
C.D.N. PATENT NO. 2,032,532 2,070,984
US PATENTS PENDING.

Ⓓ KENNETH E. SZEKELY

MATERIAL LIST

| ITEM | DESCRIPTION | PART NO. | QT'Y |
|---|---|---|---|
| 1 | | | |
| 2 | | | |
| 3 | | | |
| 4 | | | |
| 5 | | | |

REFERENCE DRAWINGS

| DWG. NO. | DESCRIPTION |
|---|---|
| | |
| | |
| | |
| | |
| | |
| | |
| | |

| No. | DATE | REVISION | APPR. |
|---|---|---|---|
| | | | |
| | | | |
| | | | |
| | | | |
| | | | |

SCALE N.T.S

| | | | |
|---|---|---|---|
| DESIGNED BY | K.S. | DATE | |
| DRAWN BY | A.M | DATE | 07/25/07 |
| CHECKED BY | J.D | DATE | 07/25/07 |
| PROJECT MANAGER | | | |
| TRADE | | PART NO. | 3000-1 |

MATERIAL HERCULITE POLYMER COMPOSITE

SUBJECT
MAX SECURE TM
MAINTENANCE FREE
INSTITUTIONAL FURNITURE

PROJECT
MAX SECURE
PERIMETER ROOF CAP
PART NO. 3000-1

| DRAWING NO. | SHT. NO. | REV. NO. |
|---|---|---|
| 3000-1 | 01 | 0 |