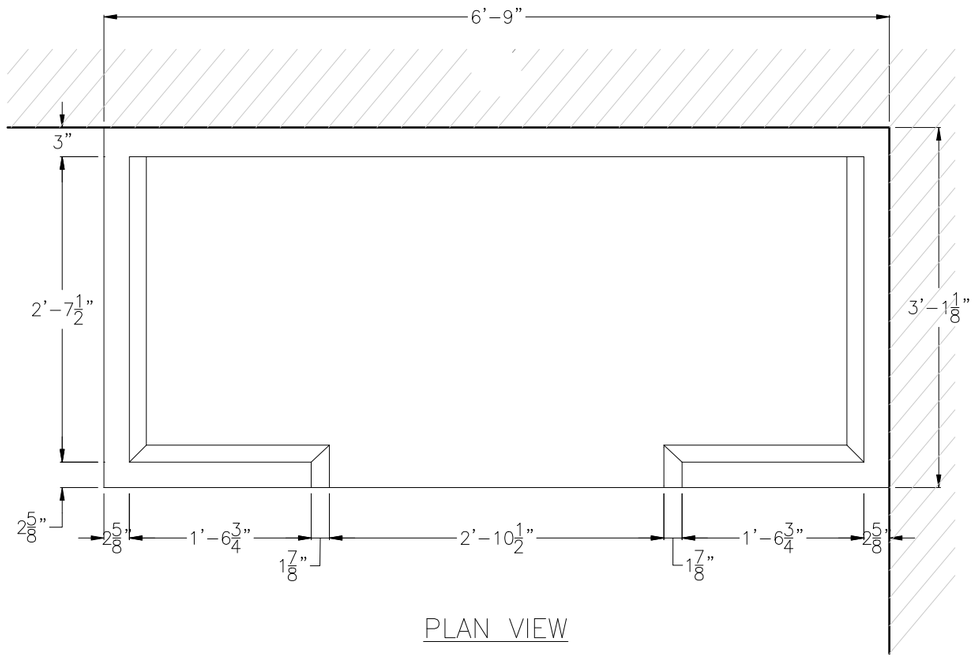

PLAN VIEW

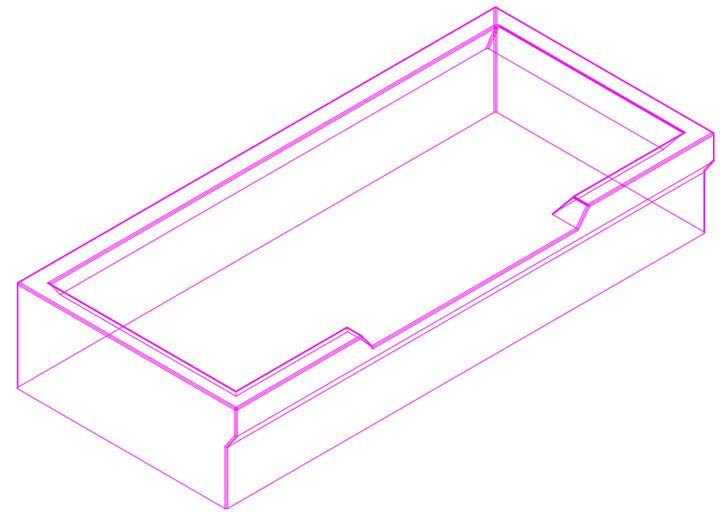

ISOMETRIC VIEW

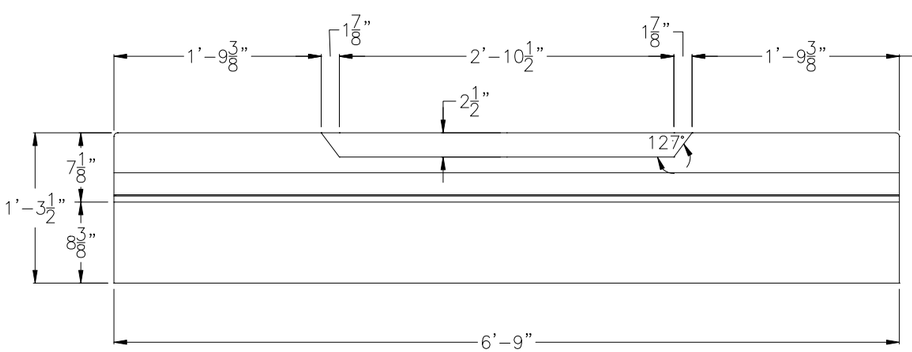

FRONT VIEW

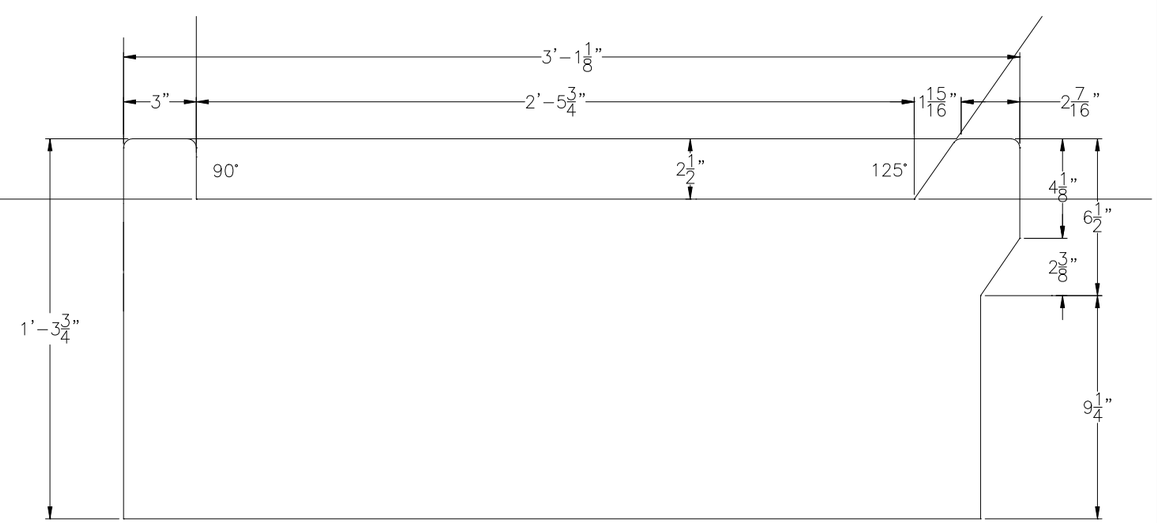

SIDE VIEW

MAX SECURE TM
Detention Products

© 2008 MAX SECURE SYSTEM INC.
CONFIDENTIAL AND PROPRIETARY DOCUMENT
ANY ONE OR MORE OF THE FOLLOWING
PATENTS MAY APPLY
U.S PATENT NO. 5,303,669 5,775,835
6,449,790 AND 6,895,622 B2
C.D.N. PATENT NO. 2,032,532 2,070,984
US PATENTS PENDING.

© KENNETH E. SZEKELY

MATERIAL LIST

ITEM	DESCRIPTION	PART NO.	QT'Y
1			
2			
3			
4			
5			

REFERENCE DRAWINGS

DWG. NO.	DESCRIPTION

No.	DATE	REVISION	APPR.

SCALE N.T.S

DESIGNED BY	K.S.	DATE
DRAWN BY	A.M	DATE 07/31/06
CHECKED BY	J.D	DATE 07/31/06
PROJECT MANAGER		
TRADE		PART NO. 5000-1
MATERIAL	HERCULITE POLYMER COMPOSITE	

SUBJECT
MAX SECURE TM
MAINTENANCE FREE
INSTITUTIONAL FURNITURE

PROJECT

LOWER BED
PART NO. 5000-1
PLAN AND ELEVATIONS

DRAWING NO.	SHT. NO.	REV. NO.
5000-1	01	0