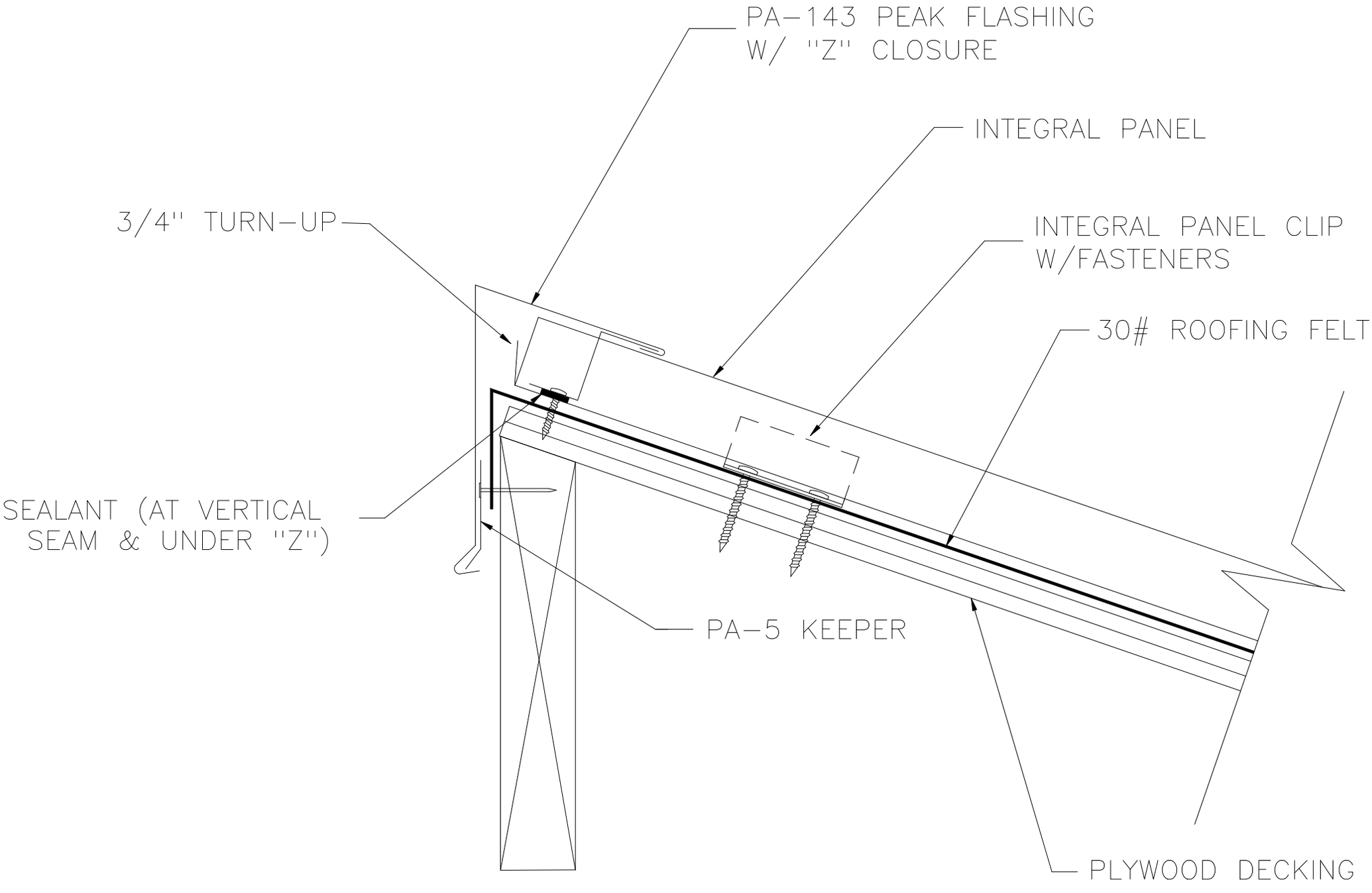
PA-143 PEAK FLASHING
W/ "Z" CLOSURE
INTEGRAL PANEL
3/4" TURN-UP
INTEGRAL PANEL CLIP
W/FASTENERS
30# ROOFING FELT
SEALANT (AT VERTICAL
SEAM & UNDER "Z")
PA-5 KEEPER
PLYWOOD DECKING