REVISIONS			
REV	ECO NO.	DATE	REVISED BY
000	103-00184	OCT-15-03	1ST RELEASE

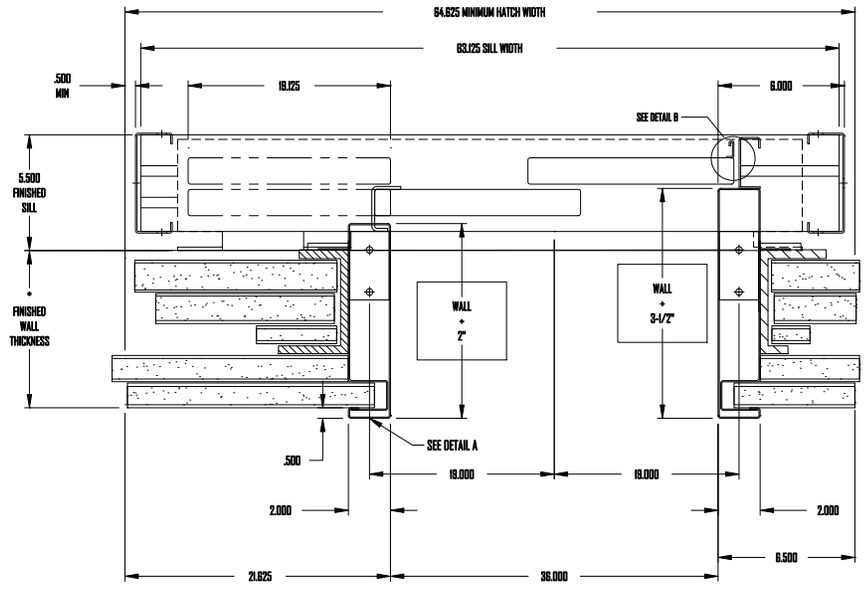

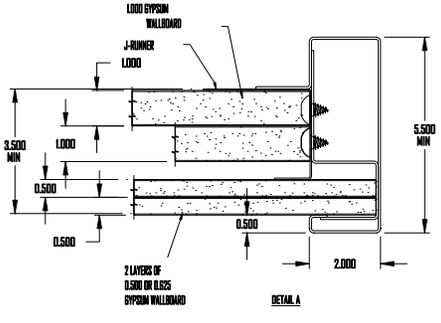

DETAIL A

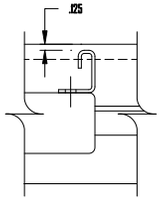

DETAIL B

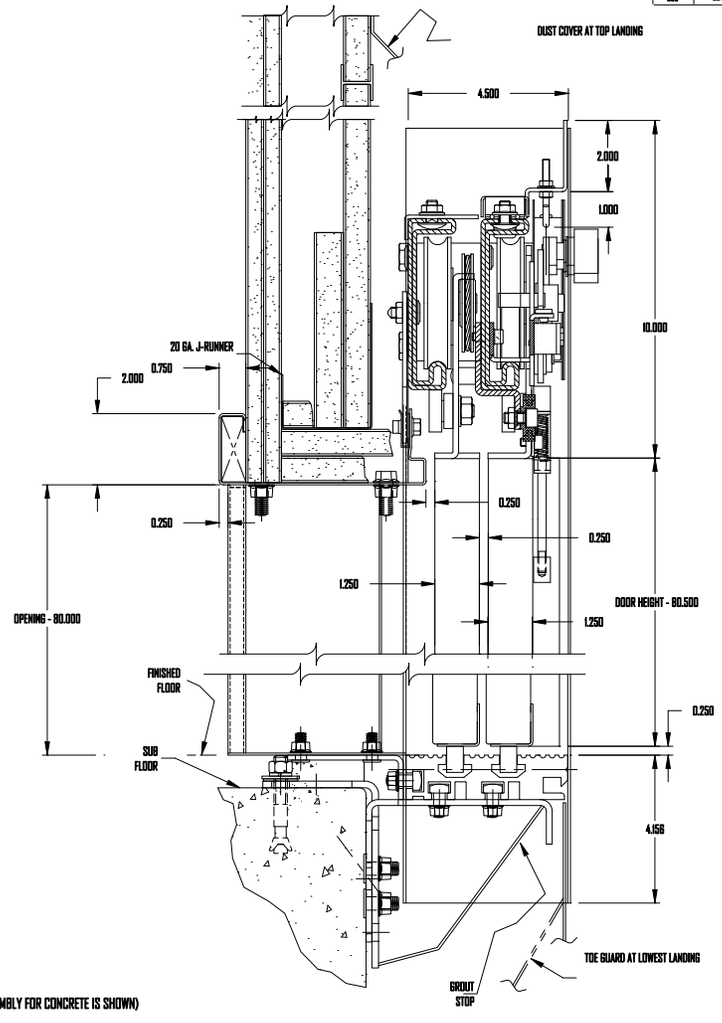

(SILL ASSEMBLY FOR CONCRETE IS SHOWN)

TYPICAL SECTION

CONTRACTOR PLEASE NOTE:

1"X12" GYPSUM BOARD LINER WITH FILLER SHIMS REQUIRED FOR ENTRANCES OVER 7'0". ENTRANCES 7'0" OR LESS IN HEIGHT, DO NOT REQUIRE THE USE OF LINERS AND FILLER SHIMS AROUND EXTERIOR OF THE FRAME.

RIGHT HAND SHOWN

THE INFORMATION DISCLOSED HEREIN IS THE EXCLUSIVE PROPERTY OF
SAVARIA CONCORD
Your Accesibility
AND MAY NOT BE USED BY OTHERS WITHOUT PRIOR WRITTEN CONSENT

TITLE: ENTRANCE 2 SPEED MNTG DETAILS -DRYWALL (WITTUR) 36.00 x 80.00

UNLESS OTHERWISE SPECIFIED
ALL DIMENSIONS ARE IN INCHES.
ALL DIMENSIONS IN () ARE METRIC
TOLERANCES ON:
.X=±0.1 (.X=±3)
.XX=±0.03 (.XX=±0.8)
.XXX=±0.01 (.XXX=±0.25)
ANGLES X =±2 .X =±0.5

MATERIAL: N/A

FINISH: N/A

DO NOT SCALE DRAWING

REMOVE ALL BURRS & SHARP CORNERS

DESIGNED BY:	DESIGN DATE:	SCALE:	REVISION:
WITTUR INC.		N/A	000
DRAWN BY:	DRAWN DATE:	DRAFTSPERSON:	
	OCT-08-03	N/A	

SHEET OF 1 1

DRAWING NO: ENT-WITTUR-DW

SIZE B