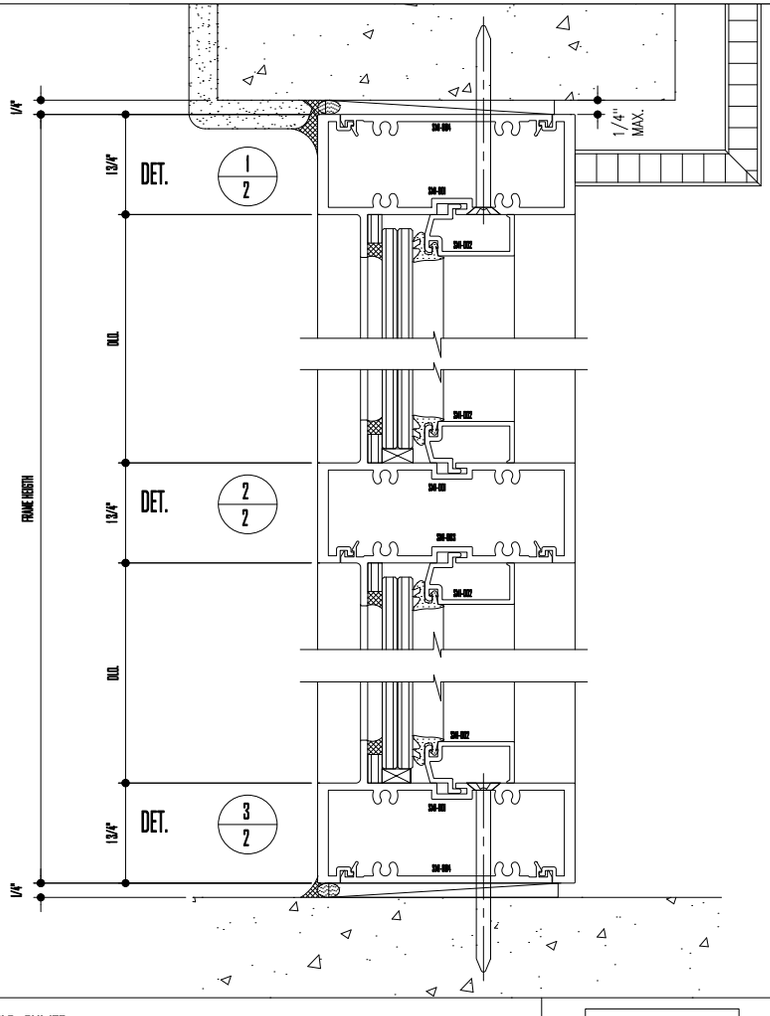

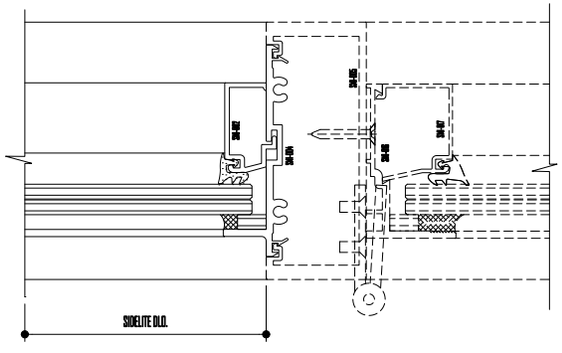

DET. 4/2

PROJECT NAME:

IMPACT SYSTEM DETAILS: SMI-175

APPROV.: ANTONIO MALAGON	DRAWN BY: LIDIA CONTRERAS	CHK.BY: ANTONIO MALAGON
REV. DATE: .	DATE: JULY 19-07	DATE: .
TEST REPORT NO.: .		
SHEET: 2 OF: 4	SERIE TEST: SMI-IMPACT SYSTEM	SCALE: 6"=1'-0"

SMI SYSTEMS

WINDOW WALL + ENTRANCE

11305 NW. 128 STREET, MEDLEY, FLORIDA 33178
PHONE: 305-888-6288 FAX: 305-888-6289