4 1/2" Aluminum System

Scale: 1/2" = 1"

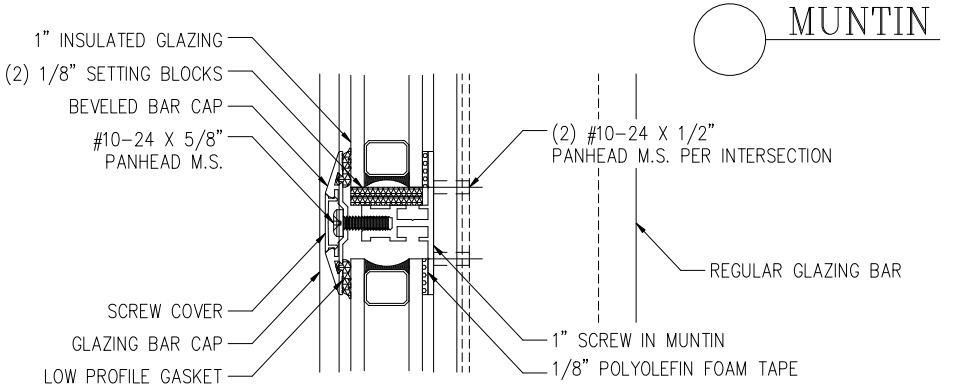

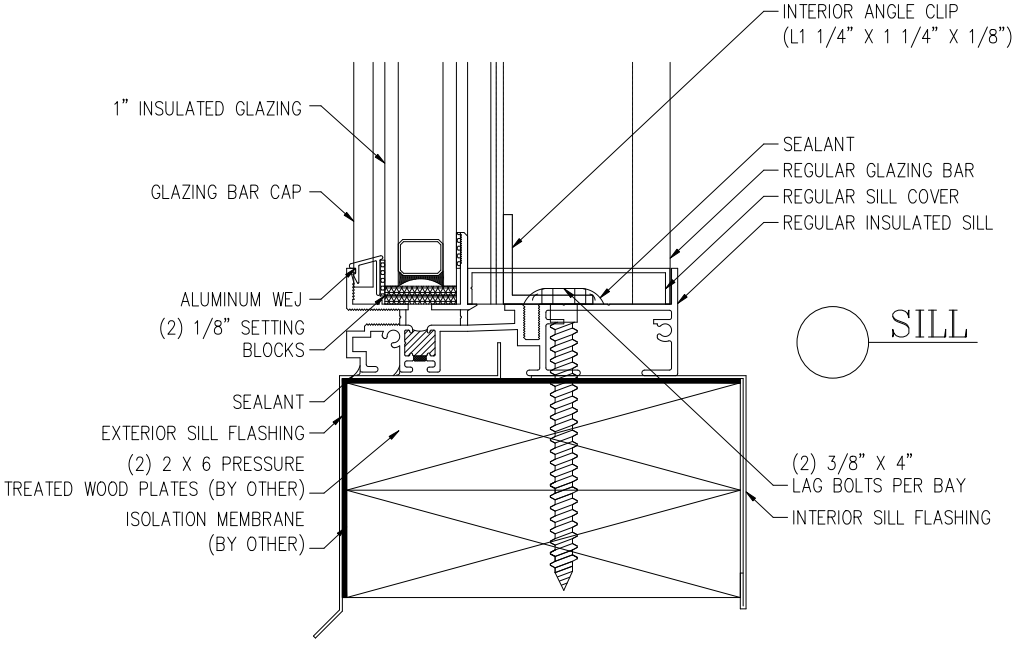

©Copyright 2006, Solar Innovations Inc.

11/10/06