Miscellaneous Details

Scale: 1/2" = 1"

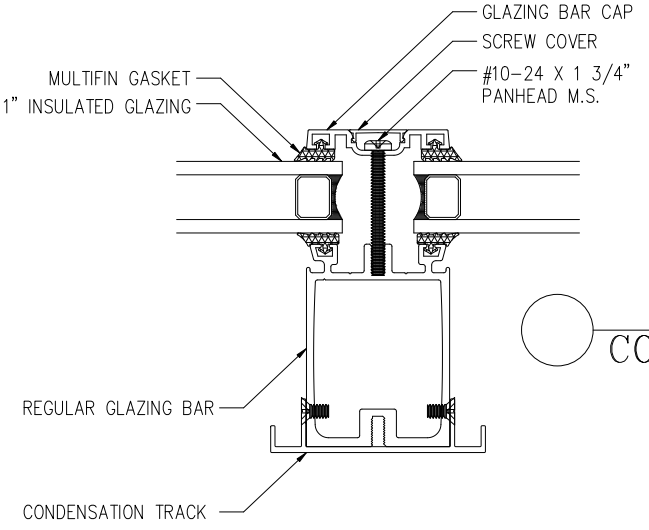

RAFTER W/ CONDENSATION TRACK

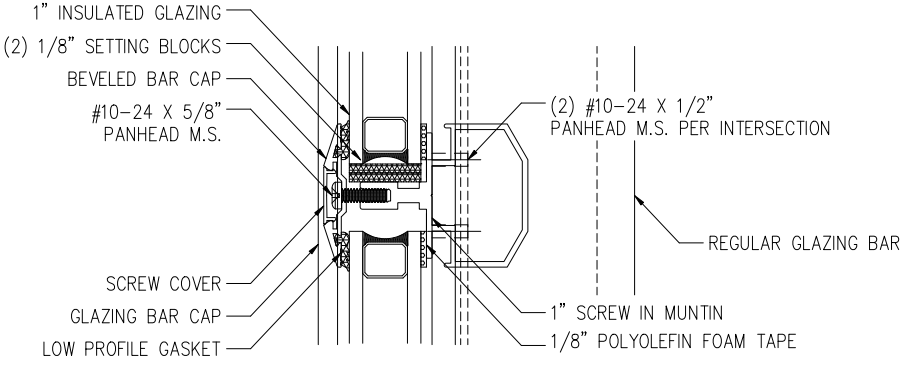

BEVELED MUNTIN

©Copyright 2006, Solar Innovations Inc.

11/10/06