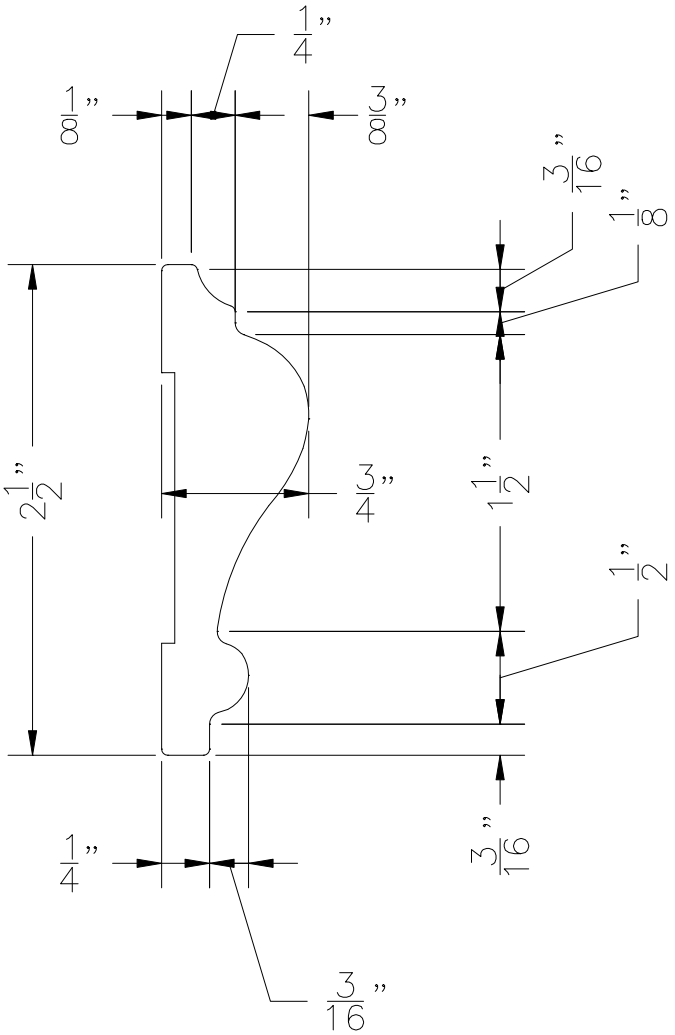

TCR-310 CHAIR RAIL- SMALL
FULL SIZE

SpecTrim BUILDING PRODUCTS, LLC
P. O. BOX 826, 3433 MARSHALL LANE
BENSALEM, PA 19020 WWW.SPECTRIMBP.COM
800/437-0557 267/223-1030 FAX 215/245-8704