BRACKET G

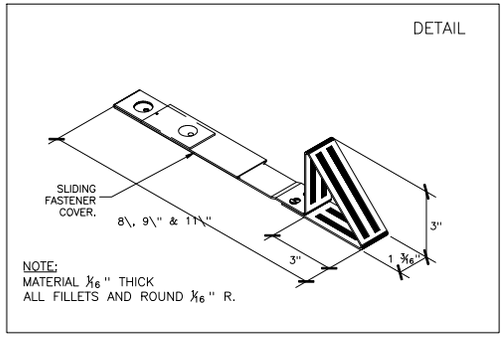
DETAIL
SLIDING FASTENER COVER.
8\, 9\" & 11\"
3"
3"
1 3/16"
NOTE:
MATERIAL 1/16" THICK
ALL FILLETS AND ROUND 1/16" R.

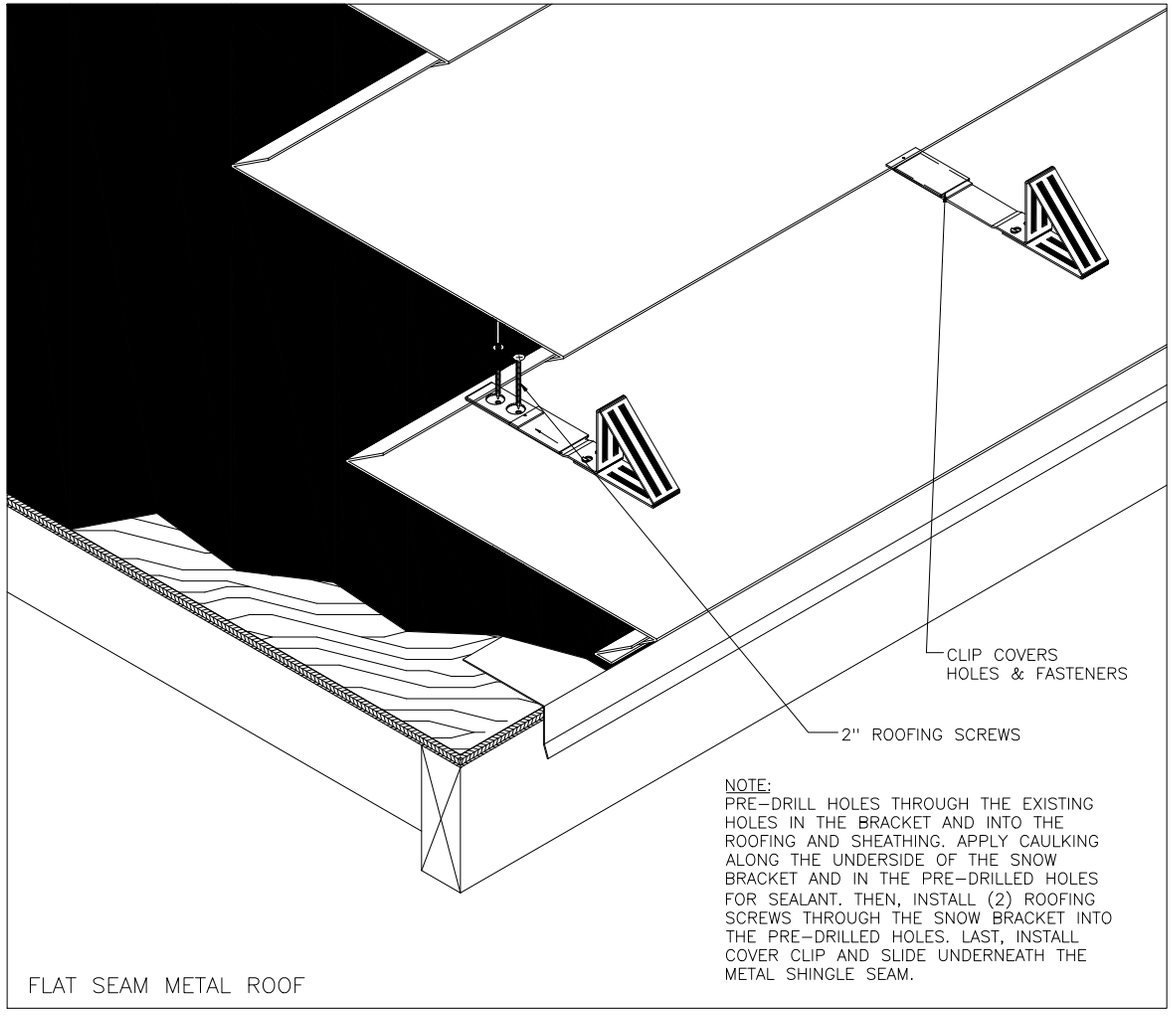
CLIP COVERS HOLES & FASTENERS
2" ROOFING SCREWS
NOTE:
PRE-DRILL HOLES THROUGH THE EXISTING HOLES IN THE BRACKET AND INTO THE ROOFING AND SHEATHING. APPLY CAULKING ALONG THE UNDERSIDE OF THE SNOW BRACKET AND IN THE PRE-DRILLED HOLES FOR SEALANT. THEN, INSTALL (2) ROOFING SCREWS THROUGH THE SNOW BRACKET INTO THE PRE-DRILLED HOLES. LAST, INSTALL COVER CLIP AND SLIDE UNDERNEATH THE METAL SHINGLE SEAM.
FLAT SEAM METAL ROOF