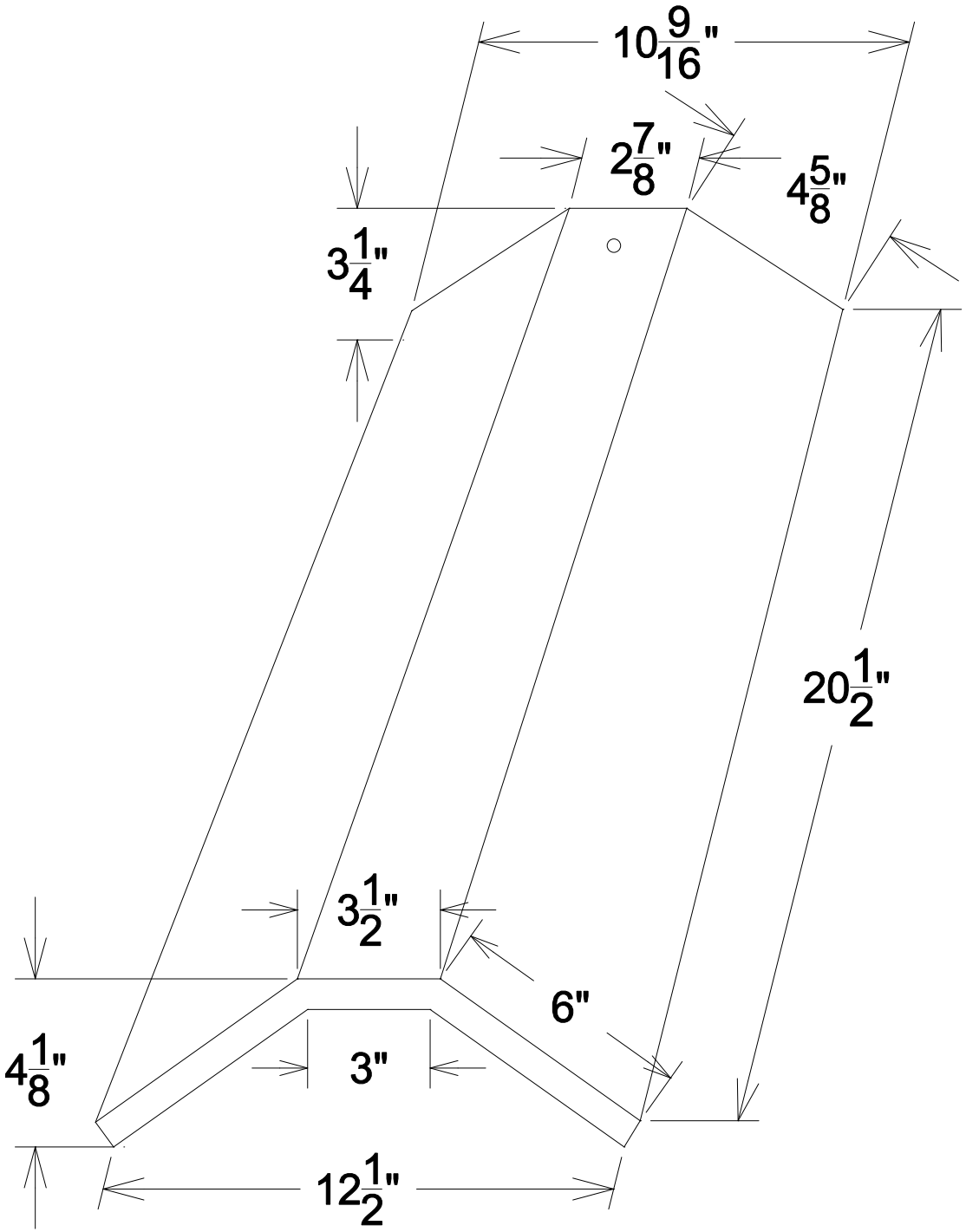
$10\frac{9}{16}$"
$2\frac{7}{8}$"
$4\frac{5}{8}$"
$3\frac{1}{4}$"
$20\frac{1}{2}$"
$3\frac{1}{2}$"
6"
$4\frac{1}{8}$"
3"
$12\frac{1}{2}$"

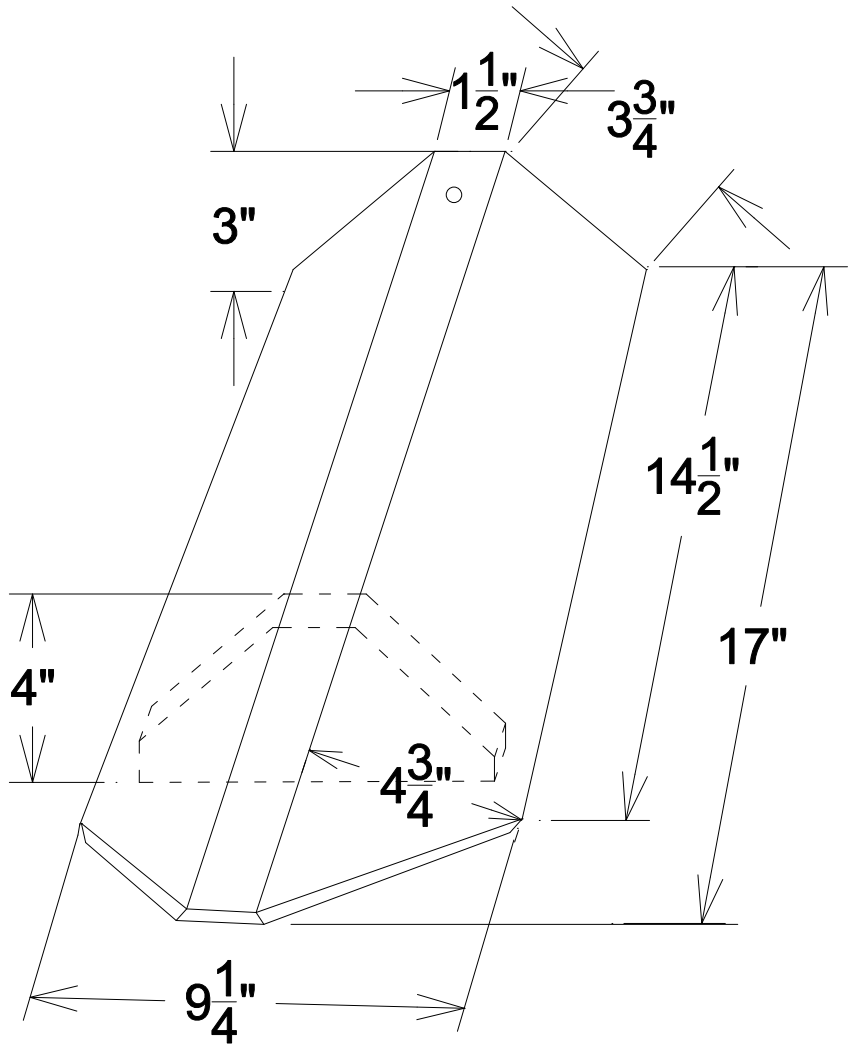
$1\frac{1}{2}$"
$3\frac{3}{4}$"
3"
$14\frac{1}{2}$"
17"
4"
$4\frac{3}{4}$"
$9\frac{1}{4}$"