REV	DATE	DESCRIPTION	BY
A	3/4/10	[illegible]	[illegible]
B	12/4/10	[illegible]	[illegible]

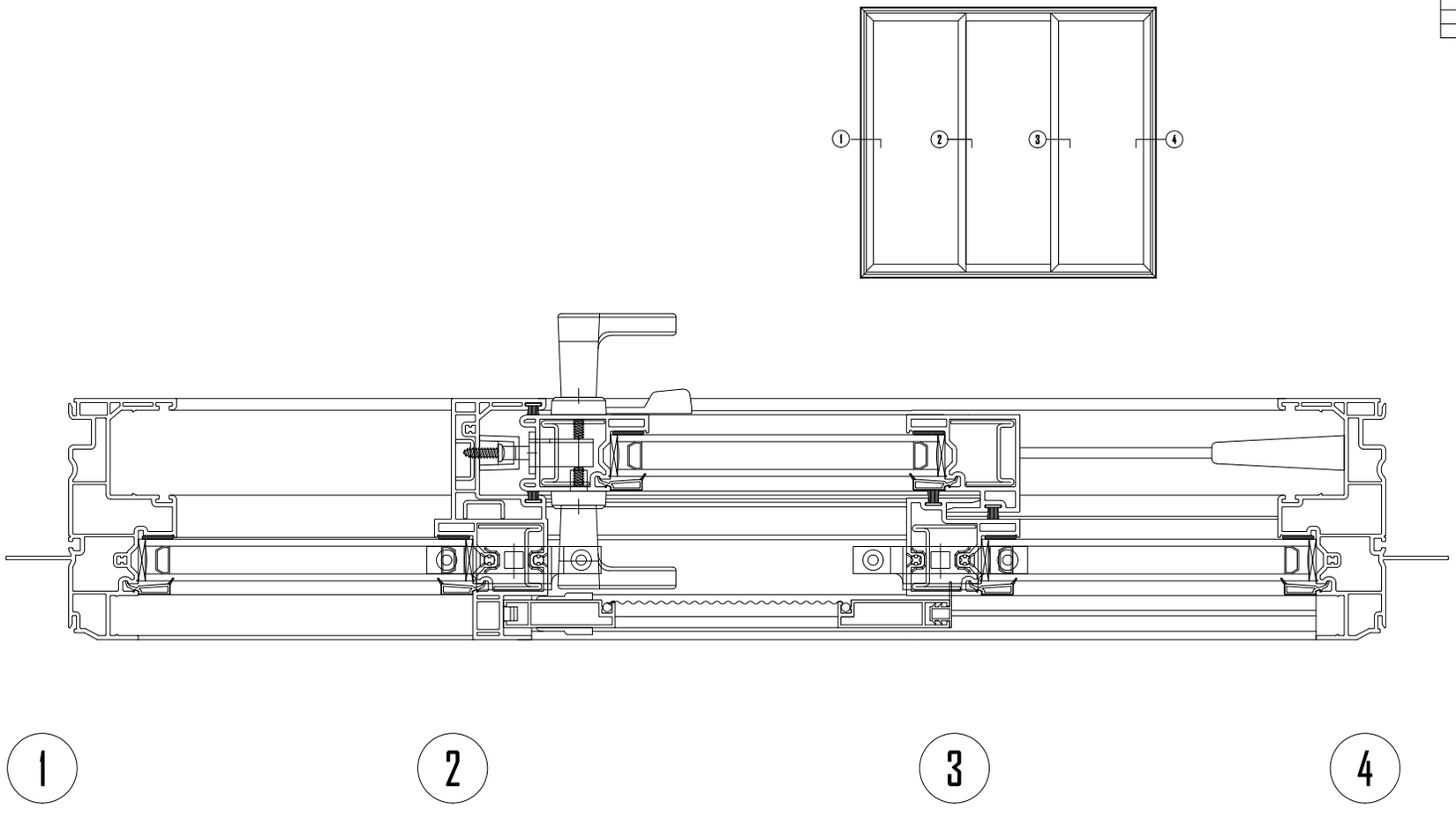

DAYTON TECHNOLOGIES

AN ALTON COMPANY

[illegible] Copyright 2005

TITLE:	MODEL 5857 PATIO DOOR (2X2)	
DRAWN BY:	BH	DATE: 06/05/05
CHECKED BY:		DATE:
SCALE:	1:1 "B"	
PART NUMBER:	5857PD 000-A	