ASSA ABLOY

ASSA ABLOY Entrance Systems
1900 Airport Road
Monroe, NC 28110
Phone: 1-866-237-2687
specdesk.na.entrance@assaabloy.com

ASSA ABLOY SW200i -IG

In Ground SW200i-IG Operator Center Pivot, Single Door

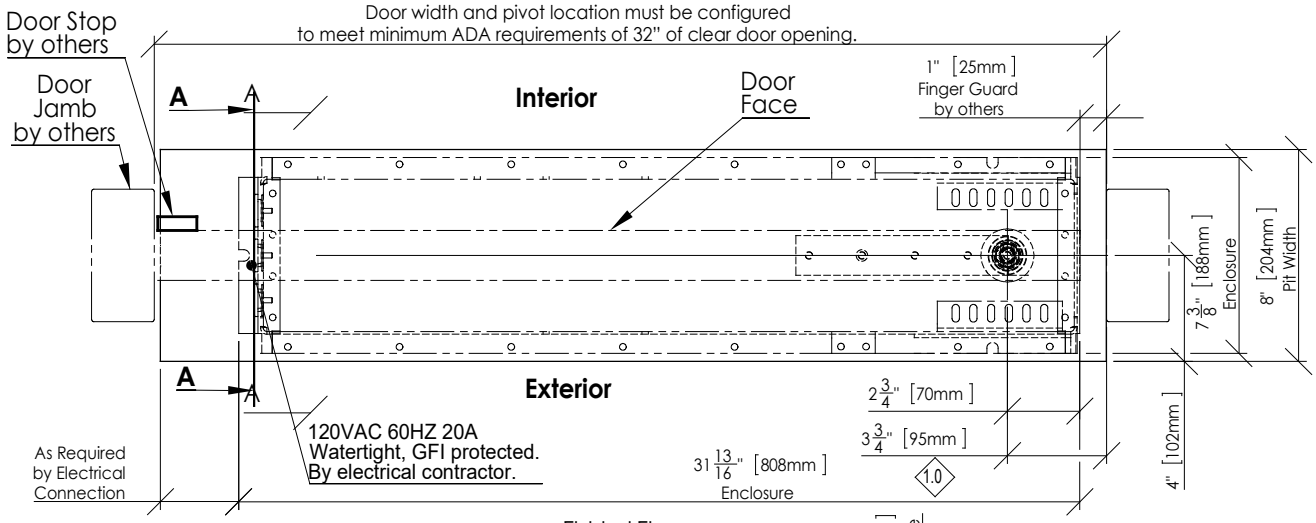

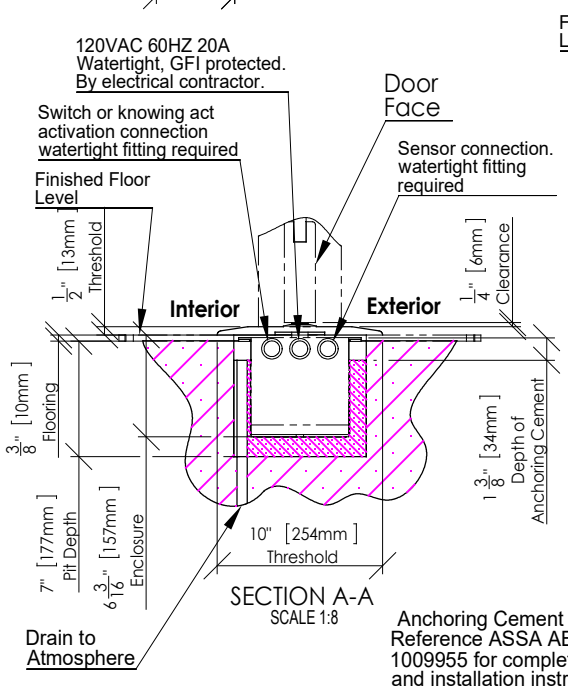

SECTION A-A
SCALE 1:8

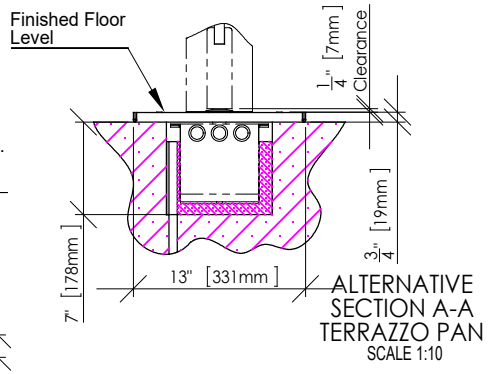

ALTERNATIVE SECTION A-A TERRAZZO PAN
SCALE 1:10

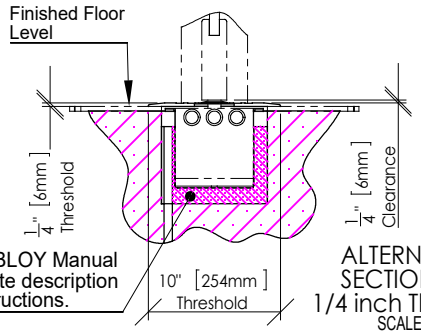

Anchoring Cement
Reference ASSA ABLOY Manual 1009955 for complete description and installation instructions.

ALTERNATIVE SECTION A-A 1/4 inch Threshold
SCALE 1:10

NOTE:

1. **The SW200i-IG In Ground Operator is designed for pedestrian and ADA applications that require manual push forces to comply with ANSI A156.19 and fire door regulations.**
   Maximum door weight 700lb [340 kg]
   Bottom Arm compatibility:
   See FTS 19-005 for complete list of compatible bottom arms
2. **SW200i-IG In Ground Operator requires purchase of SW200i Operator, a SW200i-IG installation kit and an Output Shaft Adaptor. Doors, Door Arms and threshold by others. ASSA ABLOY Center Pivot included if selected.**
3. **SW200i Power/Reset switch is mounted within the In Ground enclosure. Alternative optional Switch mounting for 3 position on/off/hold, or 4 position off/two way/one-way/hold will be required on the door frame or optional remote box.**
4. **Specify and order the required SW200i compatible Output Shaft Adaptor per Table 1 below and Besam SW200i-IG Installation Manual 1009955.**
   Door bottom arm mortise depth may vary, reference Output adaptor description in ASSA ABLOY SW200i-IG Installation Manual 1009955.
5. **The SW200i-IG enclosure is splash proof when correctly assembled. It is essential the pit is drained or provided with a sump pump to prevent water accumulation in the pit.**
6. **Finish of IG Enclosure is Black Powder Coat suitable for masonry exposure. All exterior hardware is Stainless Steel.**
7. **Optional Sensor Kits are available.**
8. **90 deg. door stop (by others) is required for all ASSA ABLOY SW200i-IG installations.**

Table 1 Center Pivot compatable arms and adaptors

7/8 " Diameter Triangular Output Adaptor	Assa Abloy Center Pivot Arm Rear load-----700lb [318 kg] Assa Abloy 1009408	11/16" Square Shaft Output Adaptor	Rixson H28/H40 Center Pivot rear & side load--700lb [318 kg] By others	7/8" Diameter Tapered Output Adaptor	Rixson 28 center pivot / Dorma BTS-80 Center Pivot bottom load-----200lb [90 kg] By others
Select for		Select for		Select for	
1/4" [6.4mm] thick threshold	ASSA ABLOY # 1018932	1/4" [6.4mm] thick threshold	ASSA ABLOY #1018960	1/4" [6.4mm] thick threshold	ASSA ABLOY #1018952
1/2" [12.7mm]thick threshold	ASSA ABLOY #1018931	1/2" [12.7mm]thick threshold	ASSA ABLOY #1018960	1/2" [12.7mm]thick threshold	ASSA ABLOY #1018952
3/4" [19.1mm] Terrazzo pan	ASSA ABLOY # 1018930	3/4" [19.1mm] Terrazzo pan	ASSA ABLOY #1018959	3/4" [19.1mm] Terrazzo pan	ASSA ABLOY #1018951

DWG. NO.	1010375						
DRN BY	mdv	DATE	03/14/13	CHK BY	DATE xx/xx/xx	REV 4.0	DATE 4/23/19

ASSA ABLOY

SHEET 1 OF 1