ASSA ABLOY
ASSA ABLOY Entrance Systems
1900 Airport Road
Monroe, NC 28110
Phone: 1-866-237-2687
specdesk.na.besam@assaabloy.com

BESAM SW100 - LOW ENERGY SURFACE APPLIED PAIR SWING DOOR OPERATORS " PUSH APPLICATION "

NOTE: DRAWING IS DIMENSIONED IN BOTH ENGLISH AND METRIC. REF. AS FOLLOWS: 1" (25.4). ALL METRIC SIZES ARE IN MILLIMETERS.
* FOR MAXIMUM CURRENT DRAW PER OPERATOR, SEE PRODUCT SPECIFICATION OR INSTALLATION INSTRUCTIONS.

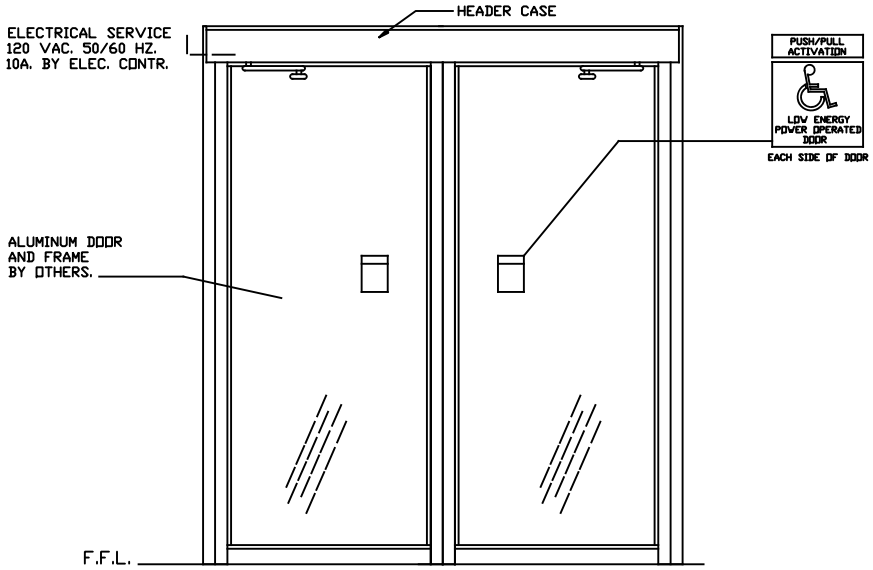

INTERIOR ELEVATION

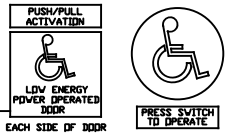

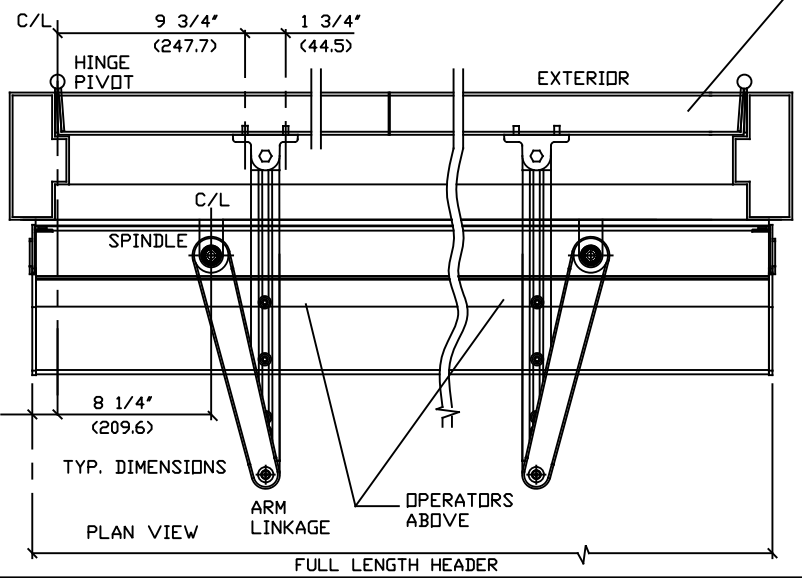

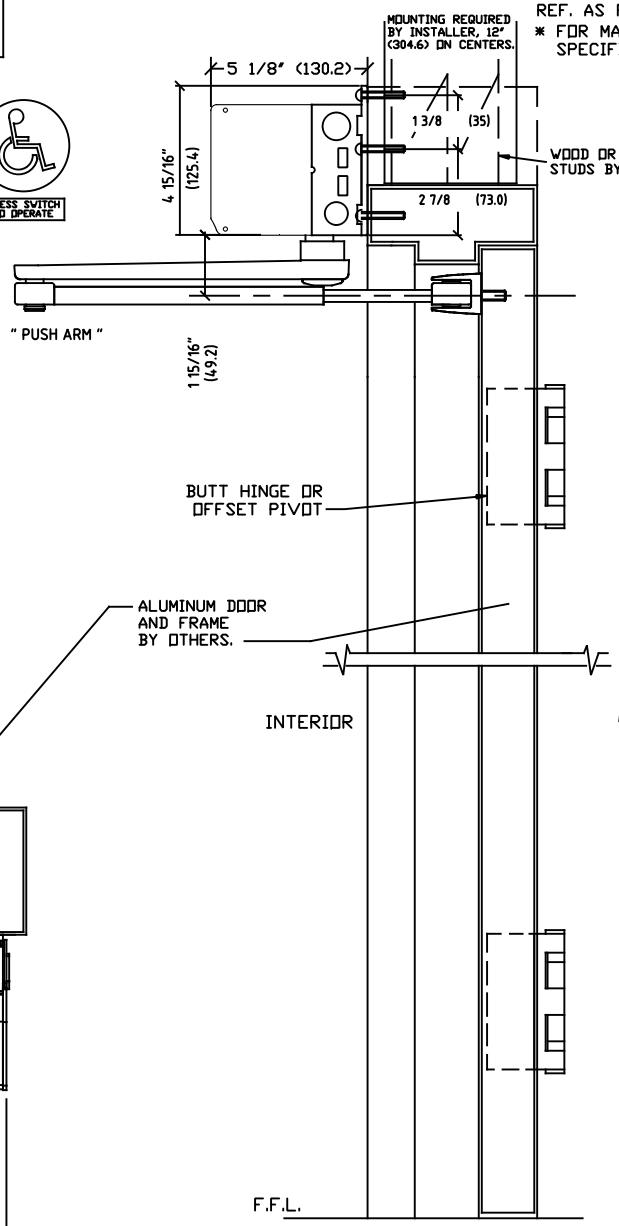

EXPLANATION OF USE

MANUAL :-
PUSH OR PULL THE DOOR OPEN AND IT CLOSES AS A NORMAL MANUAL DOOR CLOSER.

AUTOMATIC :-
ACTIVATE THE DOOR BY HANDICAPPED PUSHPLATE AND THE DOOR WILL SLOWLY POWER OPEN, TIME OUT, AND SLOWLY CLOSE.

PUSH ACTIVATION :- (OPTIONAL)
PUSH OR PULL THE DOOR AND IT WILL SLOWLY POWER OPEN , TIME OUT, AND SLOWLY CLOSE.

NOTE :- OPERATIONAL ADJUSTMENTS TO BE IN ACCORDANCE WITH ANSI/BHMA STANDARD. FOR LOW ENERGY POWER OPERATED DOORS.

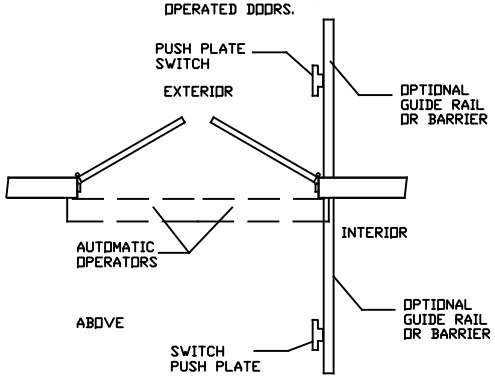

CODE
REQUIREMENT
32"(812.2) MIN. SINGLE DOOR
CLEAR OPENING WIDTH

DWG NO.	1015918								
DRN BY	MHW	DATE	10/26/16	CHK BY	SS	DATE	10/26/16	REV. 1.0	DATE

ASSA ABLOY