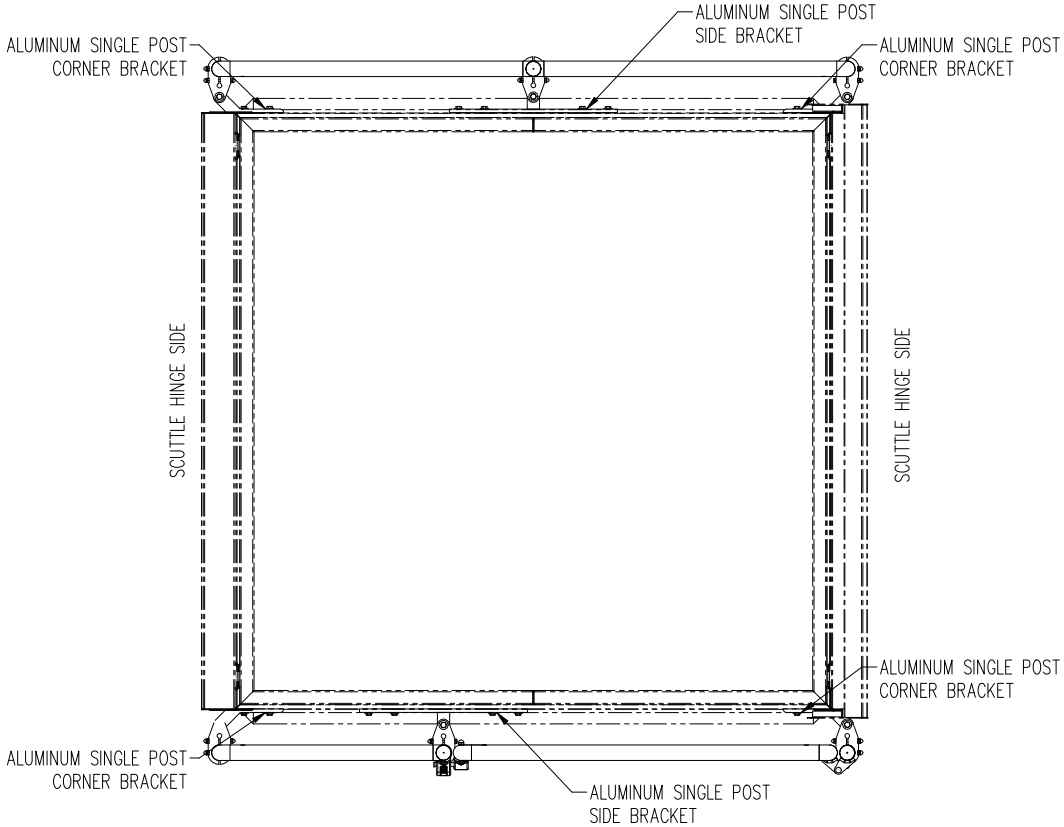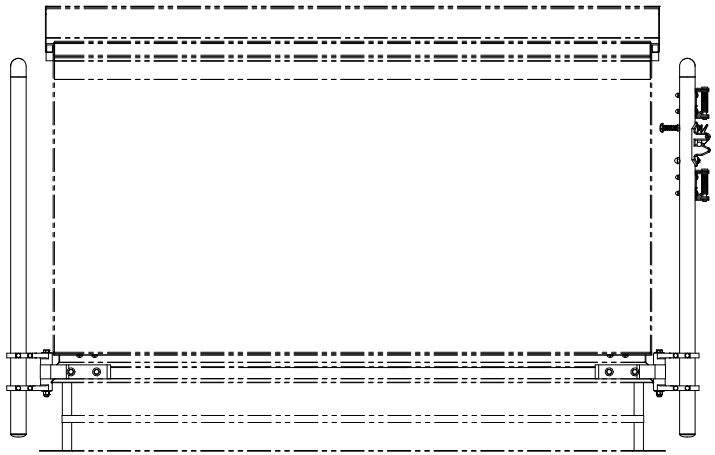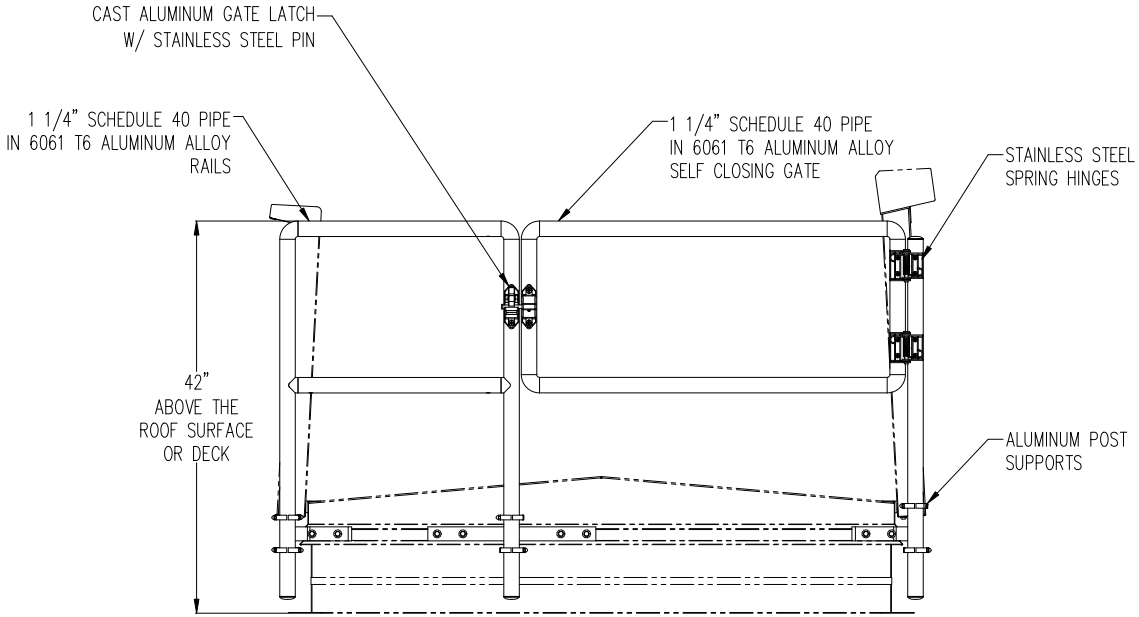BILCO
TYPE RL2-D
BIL-GUARD 2.0