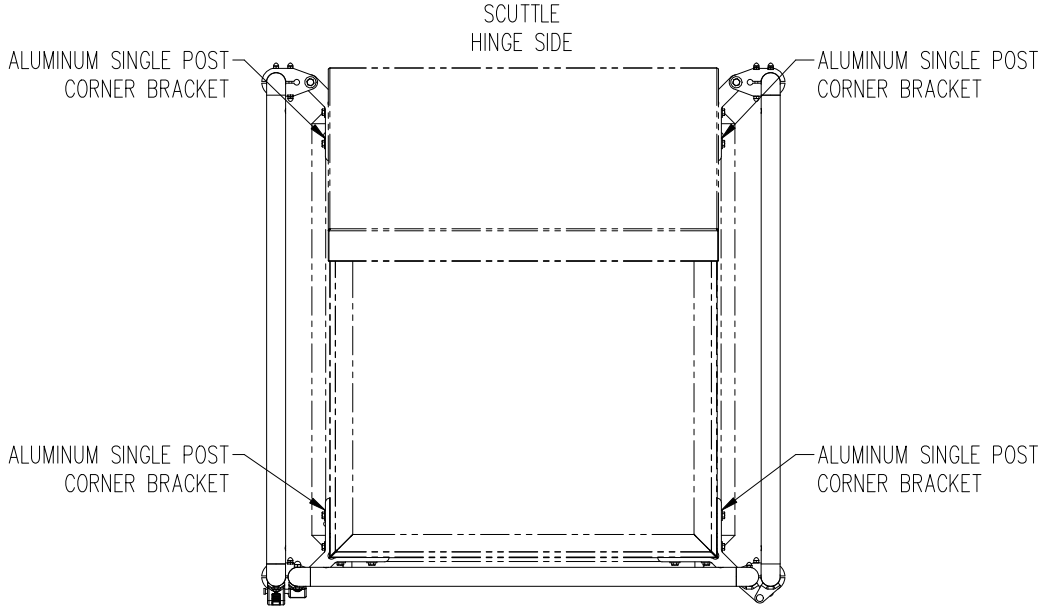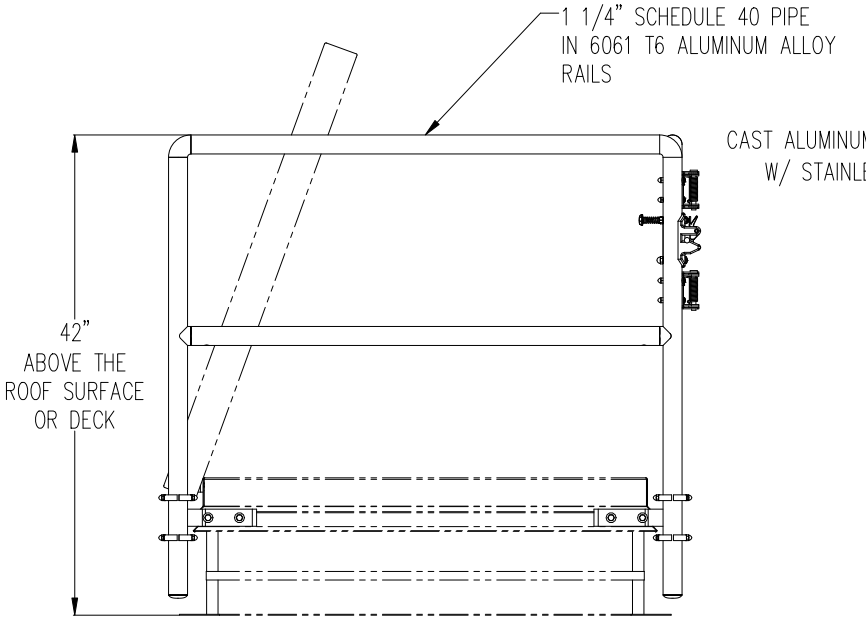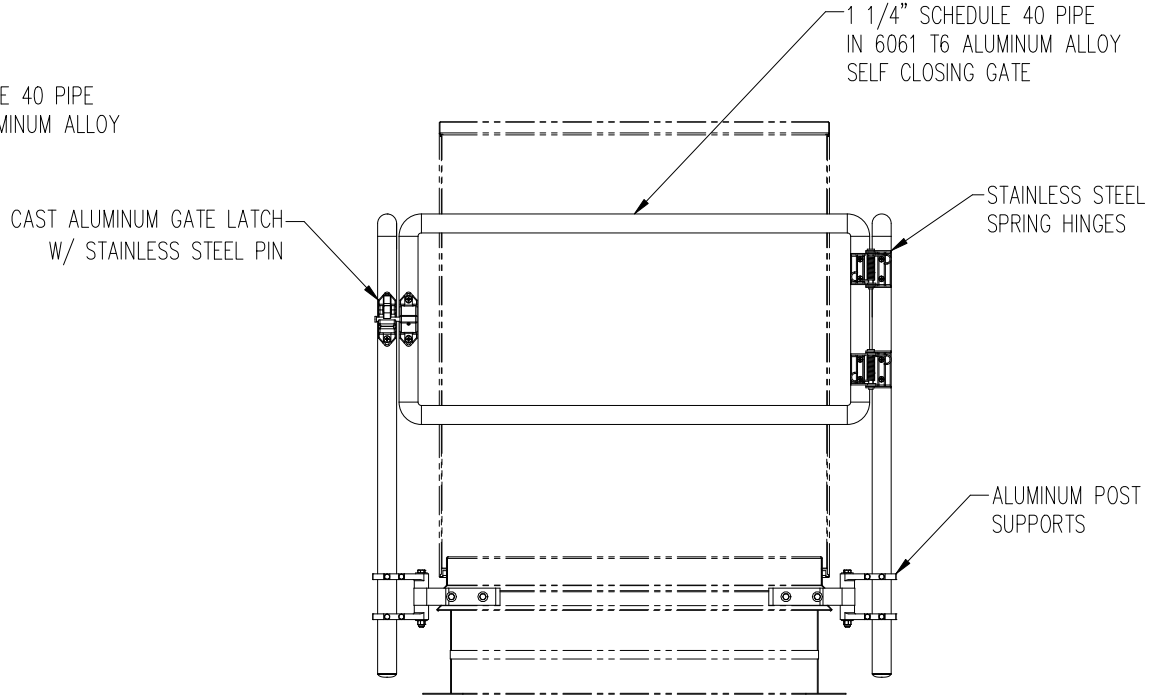BILCO
TYPE RL2-S
BIL-GUARD 2.0