BILCO
TYPE L
ROOF SCUTTLE

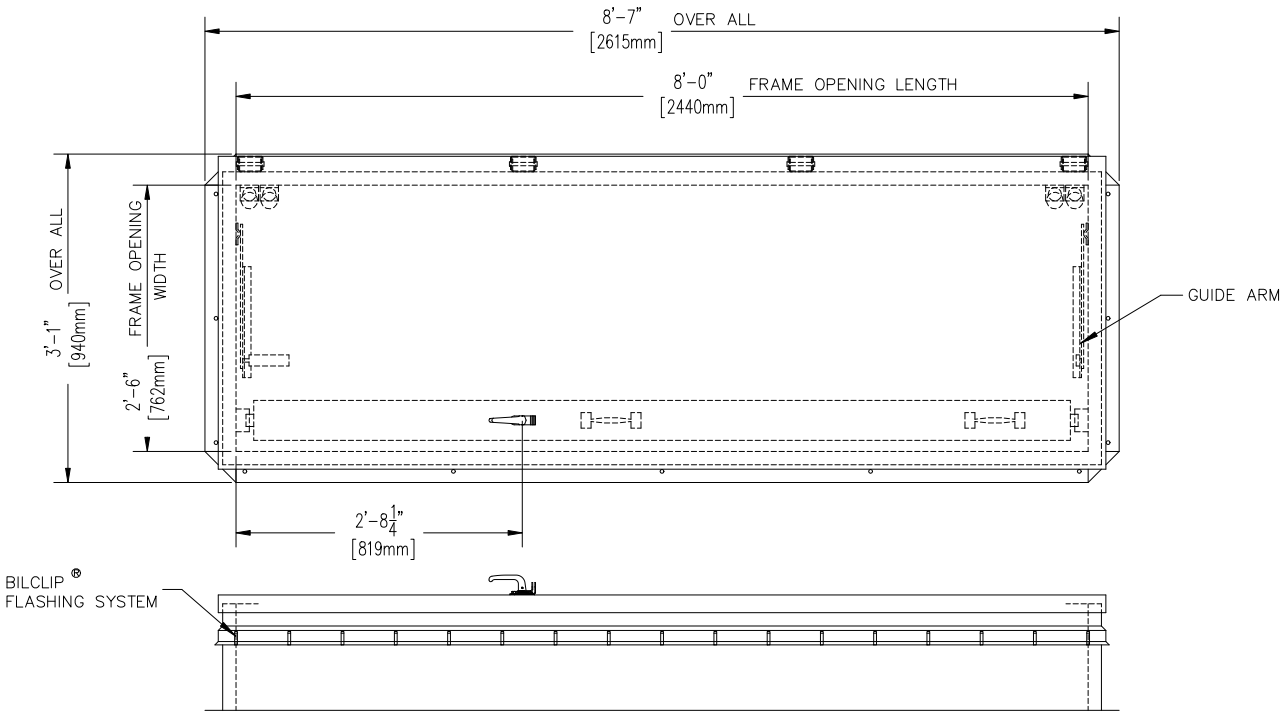

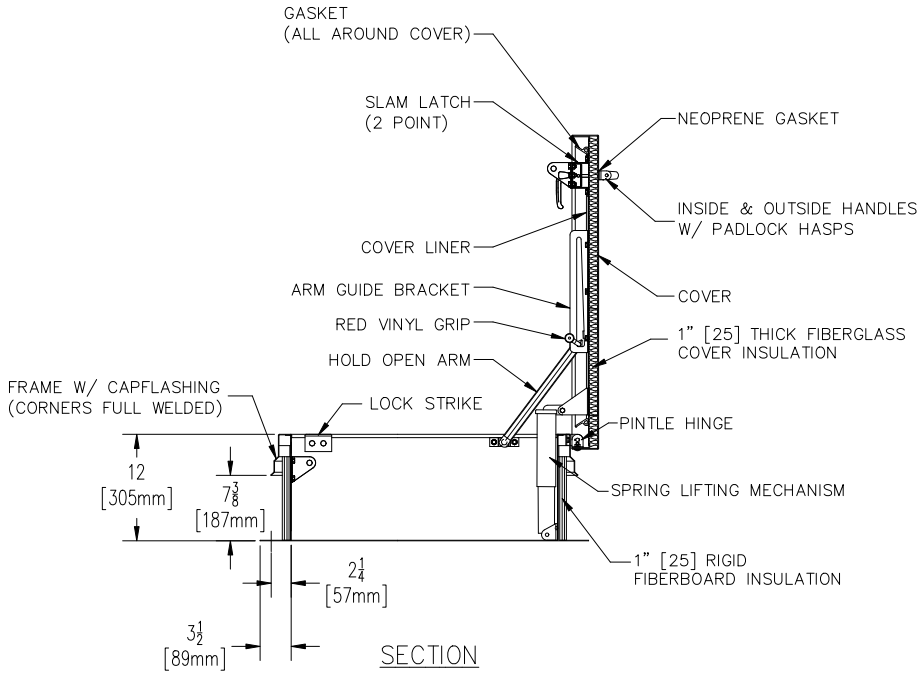

SECTION