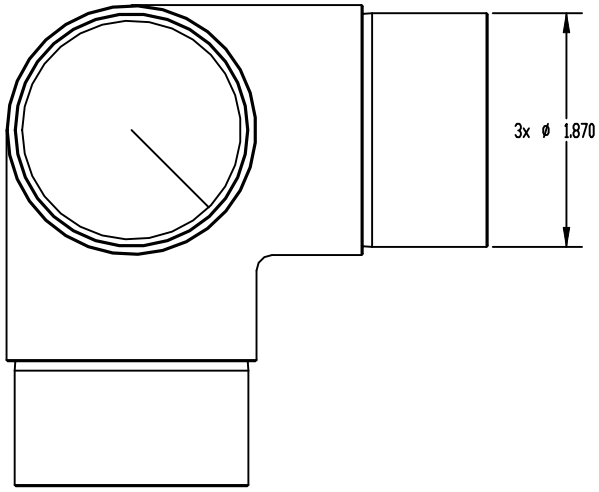

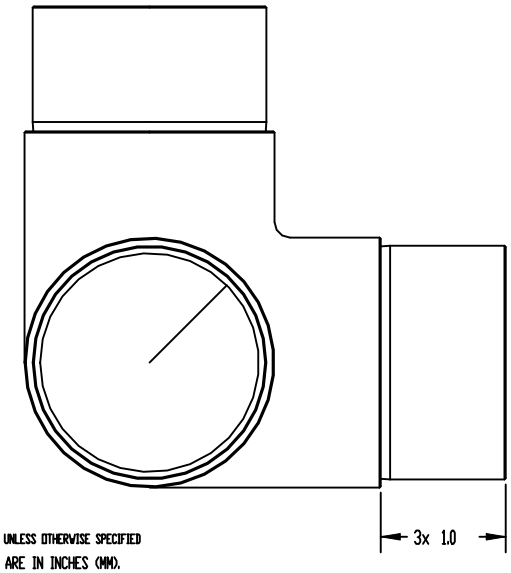

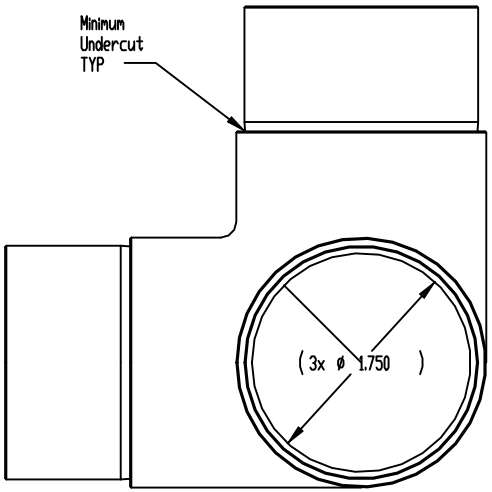

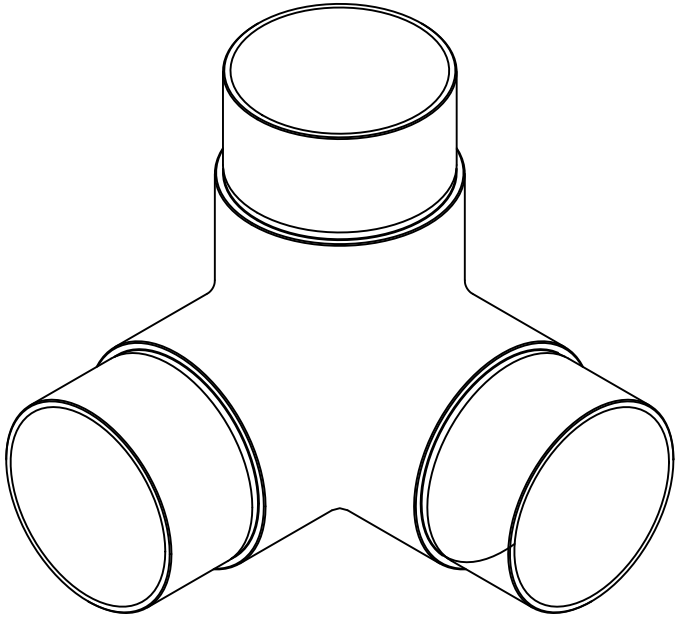

NOTES: UNLESS OTHERWISE SPECIFIED

1. DIMENSIONS ARE IN INCHES (MM).
2. MACHINED SURFACES TO BE 63 ?IN MAX.
3. DO NOT SCALE DRAWING.
4. PART TO BE FREE OF BURRS AND SHARP EDGES.
5. ALL MATERIAL TO BE CLEAN, DEGREASED AND FREE OF ALL IMPURITIES.
6. ANY CHANGE MUST BE AUTHORIZED BY AN SC&R ENGINEER.

MATERIAL TYPE: 316 SS

VENDOR ID:

REV	DATE	DESCRIPTION OF CHANGE	ECN	BY	APPR

REVISIONS

SC&R Stainless Cable & Railing

TOLERANCES UNLESS OTHERWISE SPECIFIED
.XX ±.01
.XXX ±.005
ANGULAR ±0.5°
FRACTIONAL ±1/32

DRAWN BY: GM
DATE: 1/7/2011
PROJECT:

THIS DRAWING IS THE PROPERTY OF STAINLESS CABLE & RAILING AND IS PROTECTED UNDER COPYRIGHT LAW AS AN UNPUBLISHED WORK. IT MAY NOT BE PUBLISHED, COPIED, OR REPRODUCED WITHOUT EXPRESS WRITTEN PERMISSION FROM SCR.

TITLE: Stainless 2" 3-Way Elbow

DWG NO: 05-170-01

SHEET 1 OF 1