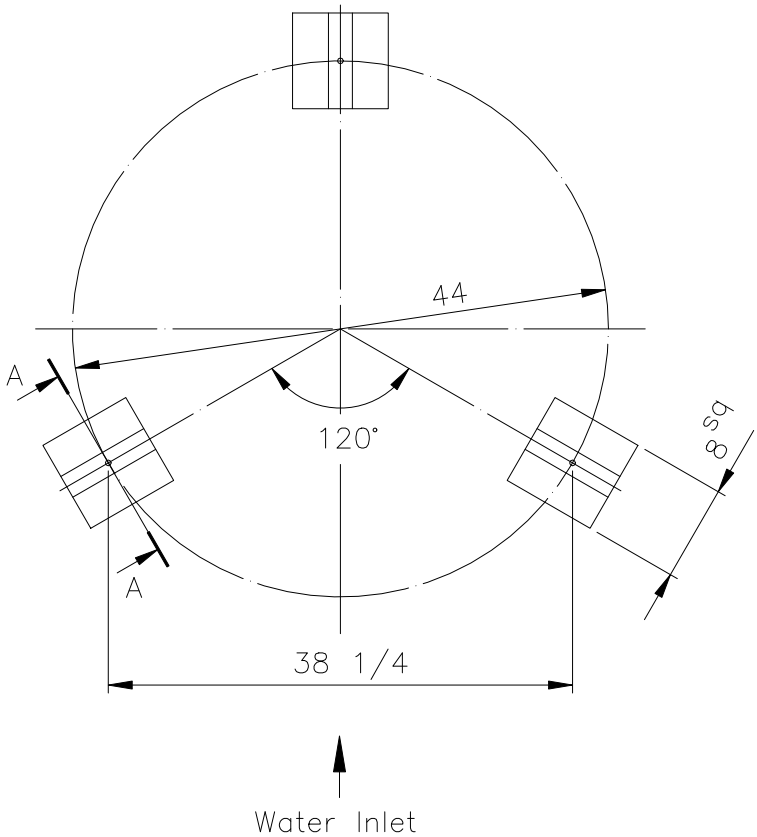

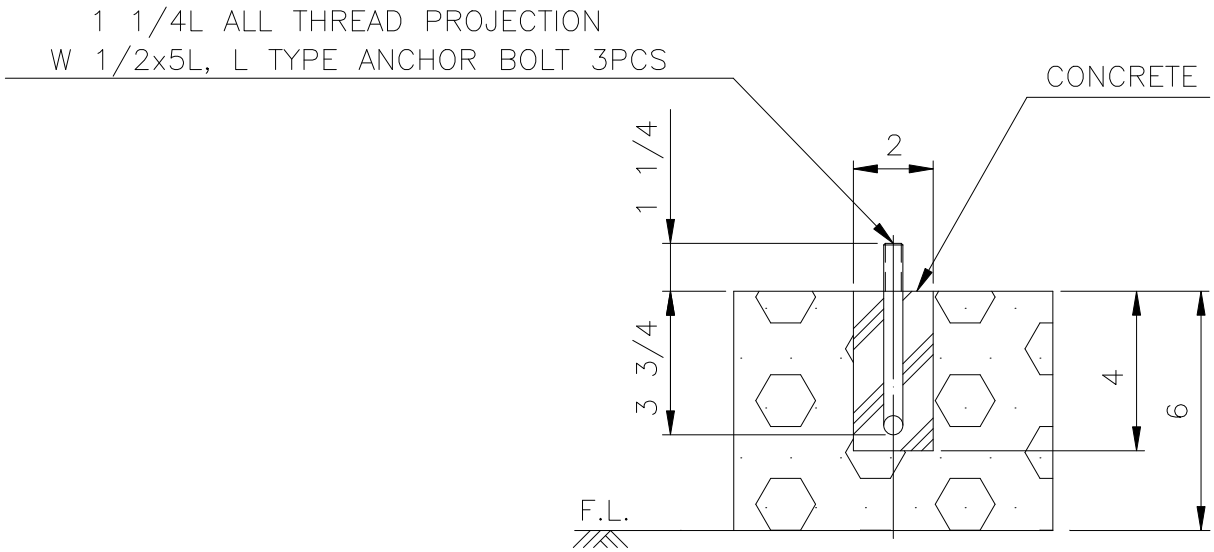

A–A SECTION

NOTE:This drawing is used for LBC,LBC–LN & LBC–W.

TITLE	T–225			C.T.S		
	FOUNDATION DETAIL					
Approved		Designed		IN	1/4	'07・02・14
Checked		Drawn		DWG NO.		
LIANG CHI INDUSTRY CO., LTD.						

B25.DWG
87–1–50–7