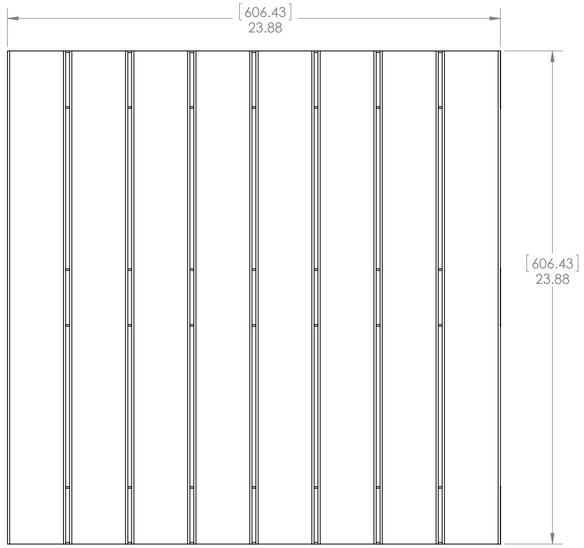
[606.43]
23.88
[606.43]
23.88

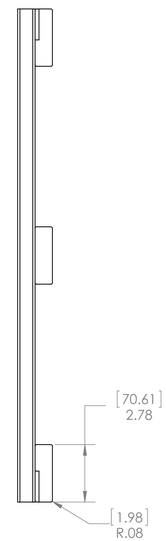
[70.61]
2.78
[1.98]
R.08

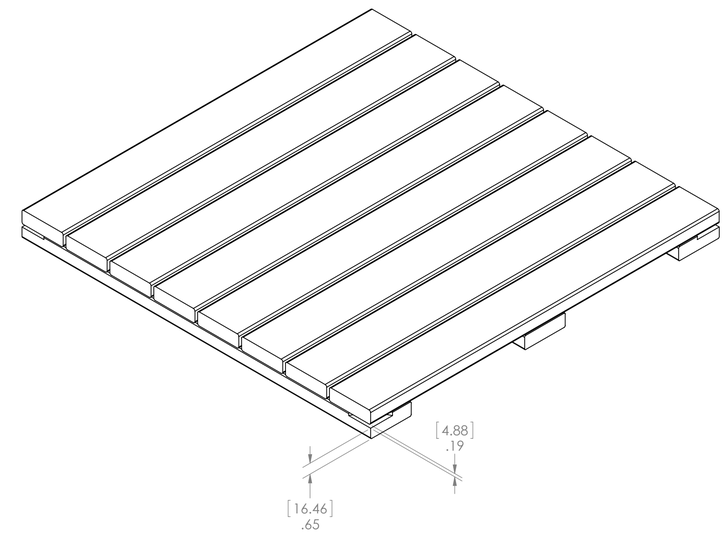
[4.88]
.19
[16.46]
.65

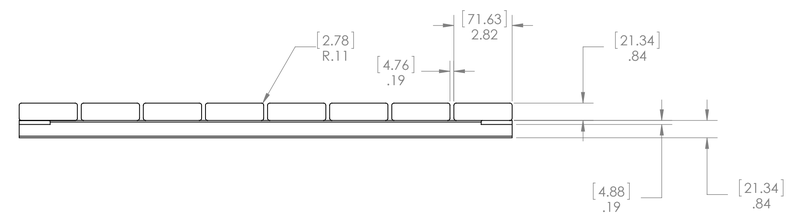
[2.78]
R.11
[71.63]
2.82
[4.76]
.19
[21.34]
.84
[4.88]
.19
[21.34]
.84

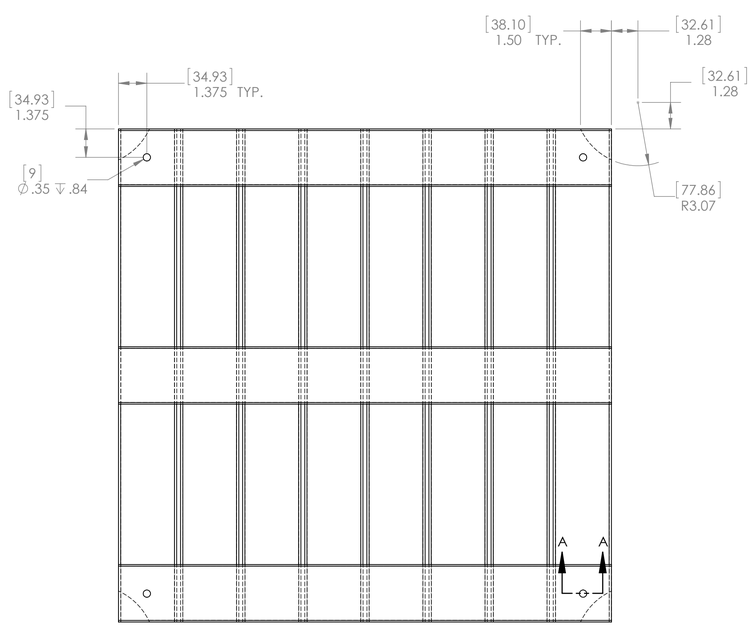
[38.10]
1.50 TYP.
[32.61]
1.28
[34.93]
1.375 TYP.
[32.61]
1.28
[34.93]
1.375
[9]
Ø.35 ↧ .84
[77.86]
R3.07
A
A

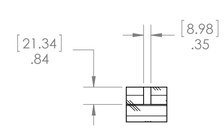
[21.34]
.84
[8.98]
.35

SECTION A-A

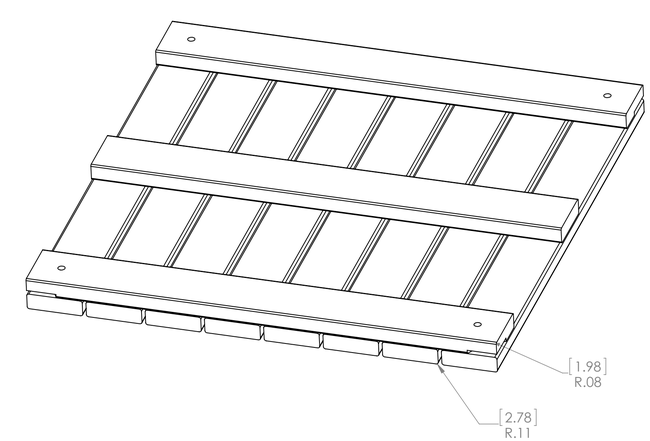
[1.98]
R.08
[2.78]
R.11