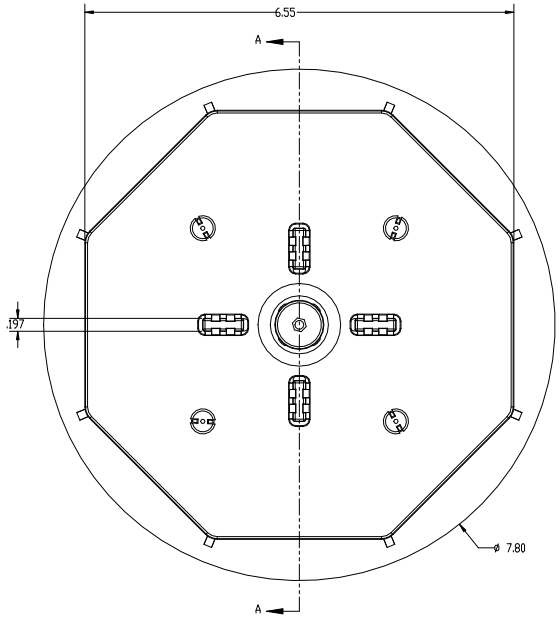


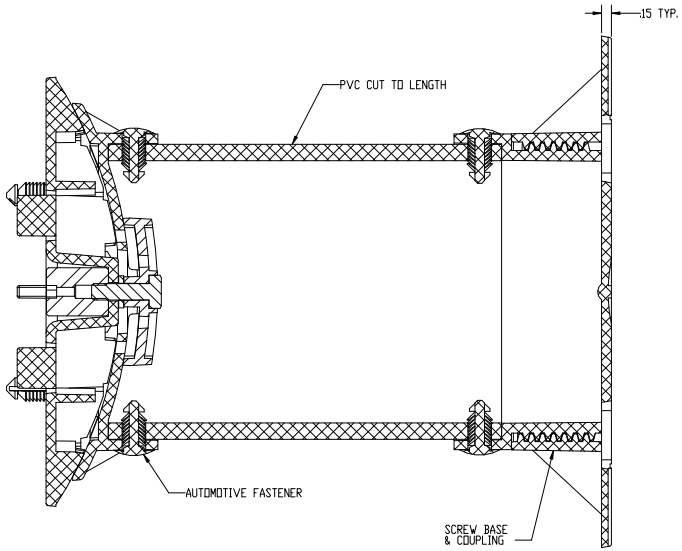


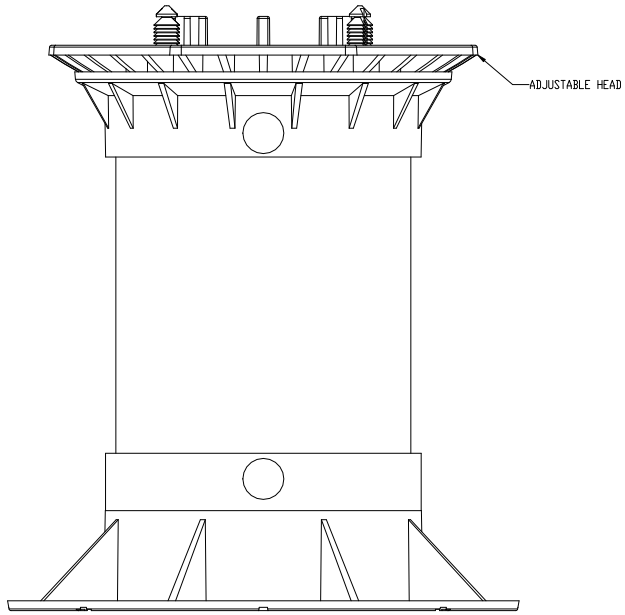


PROPRIETARY AND CONFIDENTIAL
THE INFORMATION CONTAINED IN THIS DRAWING IS THE SOLE PROPERTY OF Ipe Clip Fastener Co. ANY REPRODUCTION IN PART OR AS A WHOLE WITHOUT THE WRITTEN PERMISSION OF Ipe Clip Fastener Co. IS PROHIBITED.

| | | |
|---|---|---|
| NEXT ASSY | USED ON | |
| APPLICATION | | |

UNLESS OTHERWISE SPECIFIED:
DIMENSIONS ARE IN INCHES
TOLERANCES:
FRACTIONAL ±
ANGULAR: MACH ± BEND ±
TWO PLACE DECIMAL ±
THREE PLACE DECIMAL ±
INTERPRET GEOMETRIC TOLERANCING PER:
MATERIAL
20% TALC PP
FINISH
DO NOT SCALE DRAWING

| | NAME | DATE |
|---|---|---|
| DRAWN | JDJ | 5/18/18 |
| CHECKED | | |
| ENG APPR. | | |
| MFG APPR. | | |
| Q.A. | | |

COMMENTS:

Ipe Clip Fastener Co.

TITLE:
ADJUSTABLE HEAD & SCREW BASE

SIZE D | DWG. NO. AH-SB-001-D | REV

SCALE: 1:1 WEIGHT: SHEET 1 OF 1