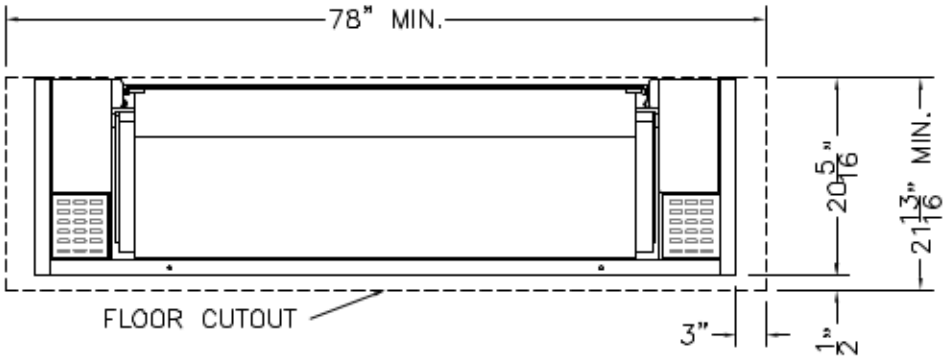

PLAN VIEW

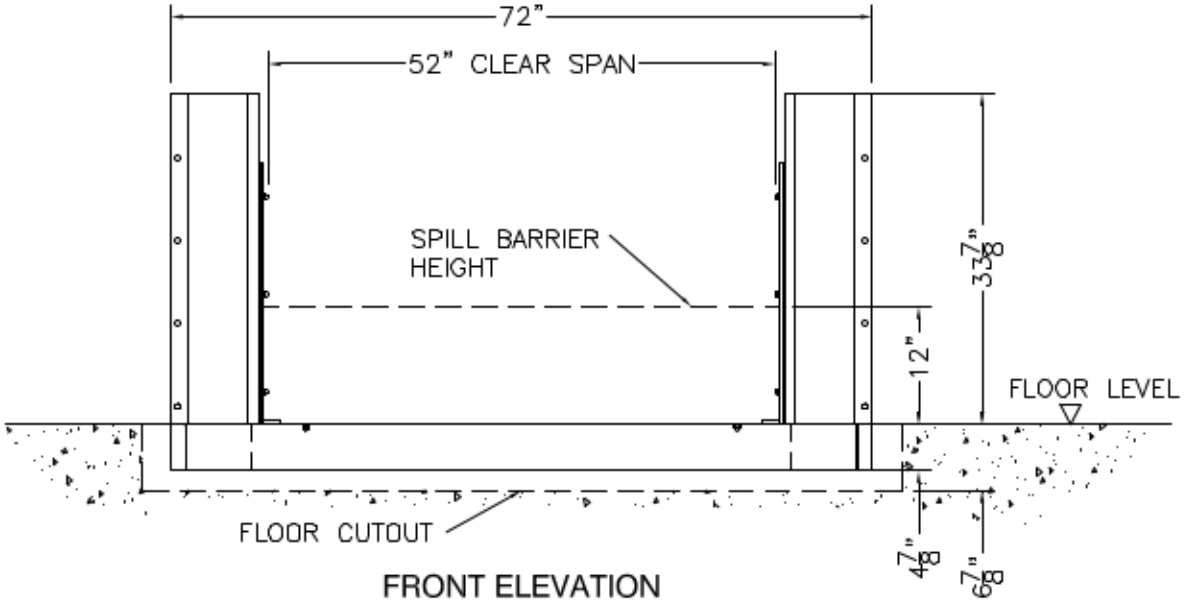

FRONT ELEVATION

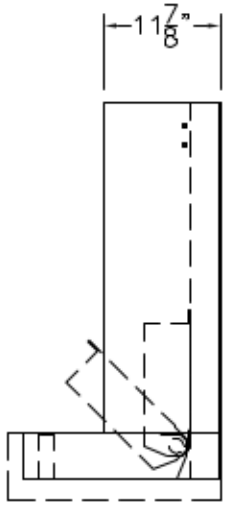

SIDE ELEVATION

CUSTOMER MEASURED SPAN : 48"

MODEL: R14-0412		**CUSTOMER:**			
DESCR.: AUTOMATIC DOORWAY SPILL BARRIER		**DRAWN BY:** DV	**DATE:** 11/12/13	**APPROVAL SIGNATURE**	
DWG NUMBER:	**REVISION:** 00	**ORDER NO.:**	**SHEET:** 1 OF 1	**DATE:**	

DENIOS
"Compliant Storage Systems for Hazardous Material"

THIS DRAWING IS THE PROPERTY OF DENIOS INC., IT MAY NOT BE REPRODUCED, DISCLOSED, DISTRIBUTED OR USED IN MANUFACTURE WITHOUT OUR EXPRESS WRITTEN CONSENT.