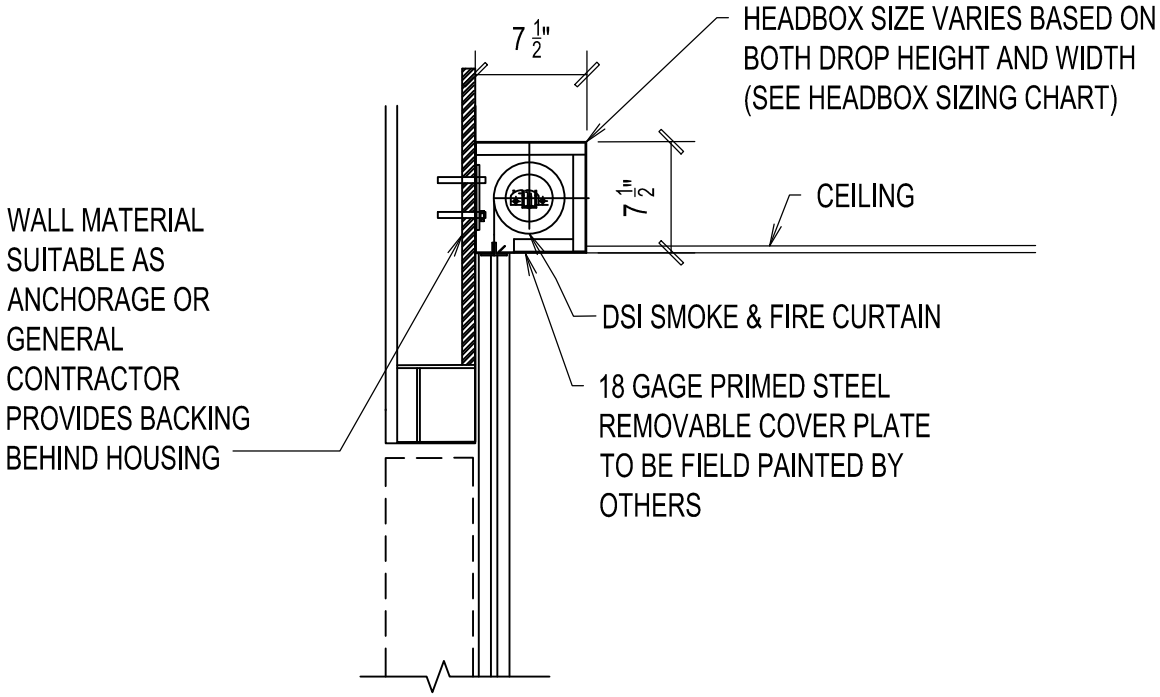

DOOR SYSTEMS

www.doorsysinc.com

DSI SMOKE & FIRE CURTAIN HEAD DETAIL – FLUSH TO CEILING

SCALE: 1"=1'-0"	HEAD BOX OPTION #1
DRAWN: 05/2019	