DRG. NO. 10 FT SENTRY GATE REV. .

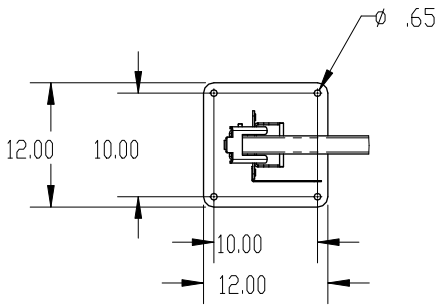

DETAIL A
SCALE 1 : 16

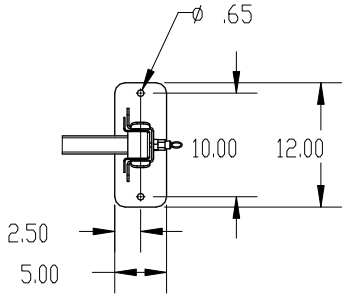

DETAIL B
SCALE 1 : 16

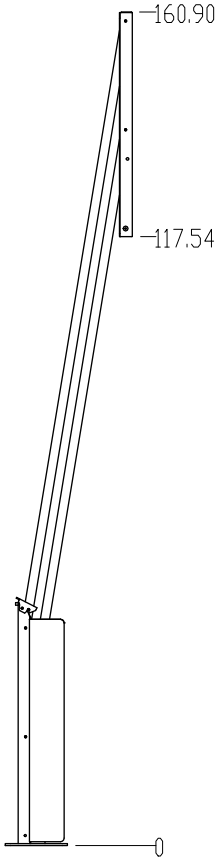

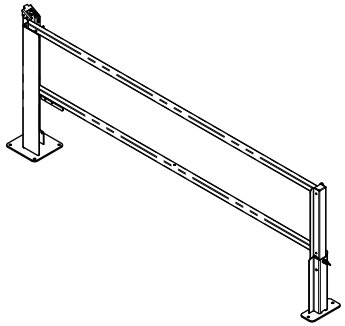

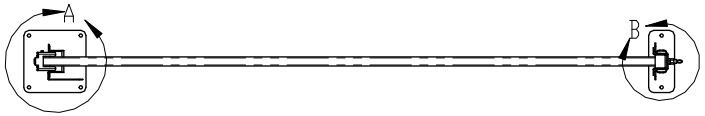

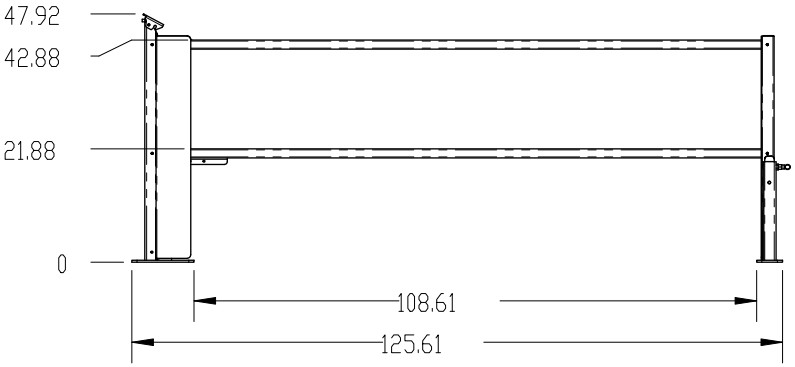

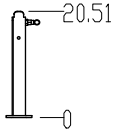

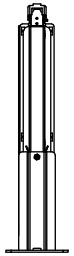

REVISION BLOCK			MAT'L DESC.
L	DESCRIPTION OF REVISION	DATE /#	
			MAT'L NO.
			PART WGT.

FRONT R. SIDE

TOLERANCES U.O.S.
0.00 ± 0.03
0.000 ± 0.005
ANGLE ± 0.50 °

DWN. SCJ DATE 04/11/14

GARLOCK
EQUIPMENT CO.

10 FT SENTRY LIFT GATE

SIZE A SCALE 1:32

DO NOT SCALE DRAWING

THIS DOCUMENT CONTAINS CONFIDENTIAL PROPRIETARY INFORMATION OF GARLOCK EQUIPMENT CO. AND IS NOT TO BE DISCLOSED TO OTHERS