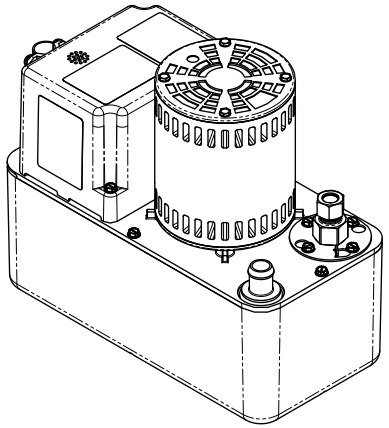

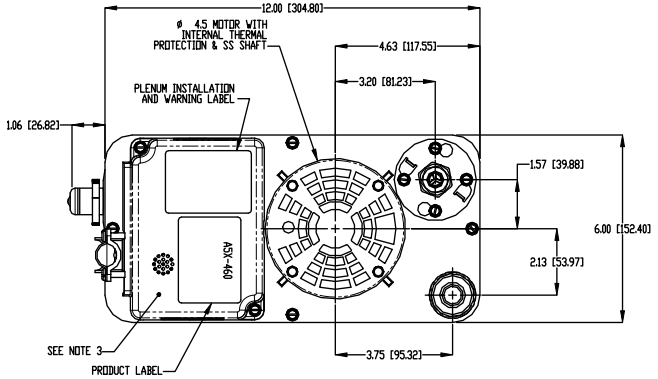

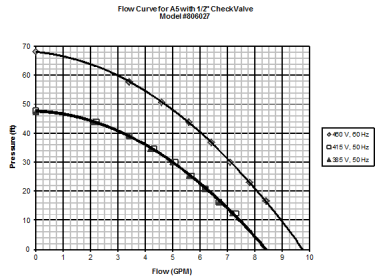

ELECTRICAL SPECIFICATIONS:
VOLTS : 380/460V
FREQ : 50/60Hz
AMPS : 1.2 @ 460V/60Hz

LEADS : PWR & GND = 14 AWG
AUX SWITCH = 20 AWG
INS : 2/64, 90°C

PLUMBING:
INTAKE : 3/4" BARBED
DISCHARGE : 1/2" COPPER TUBING

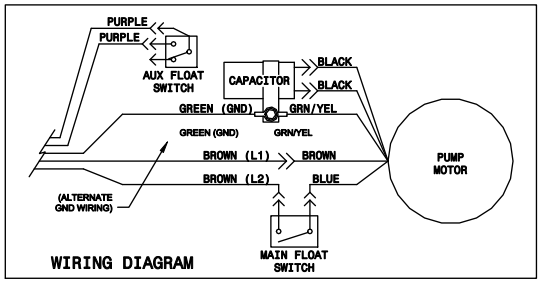

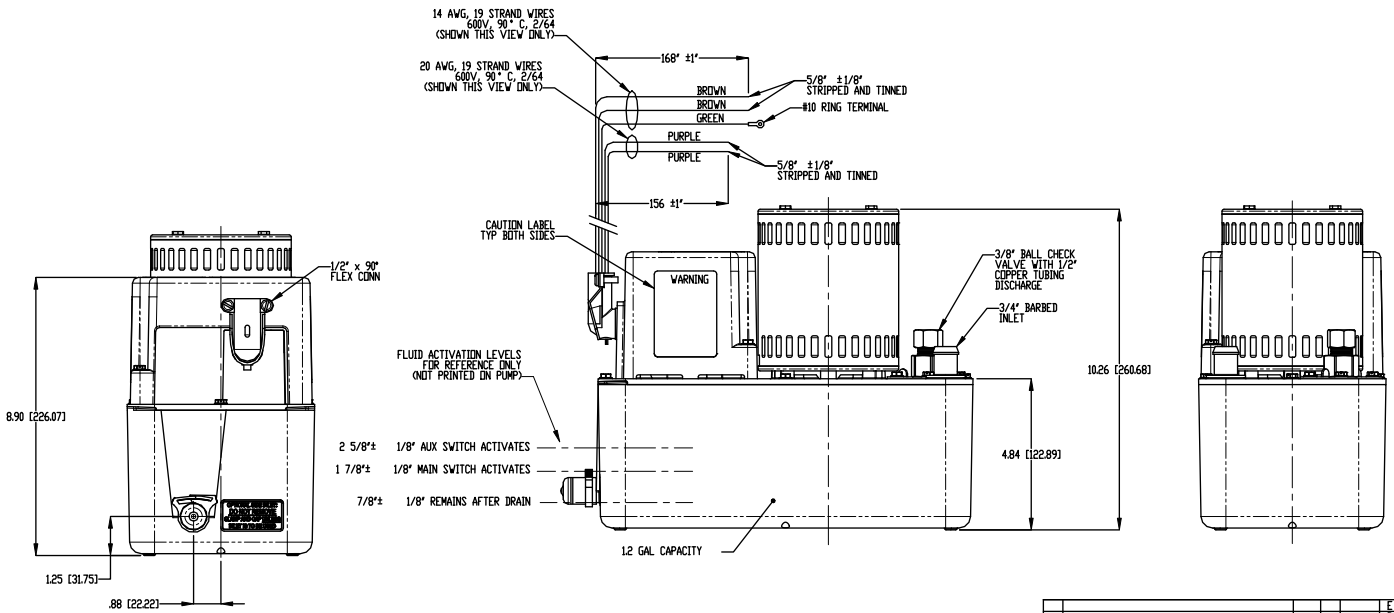

NOTE:
1. DIMENSIONS ARE FOR REFERENCE ONLY
2. SEE DRAWING 806000 FOR ADDITIONAL PUMP SPECIFICATIONS
3. WIRING DIAGRAM PICTURED ABOVE LOCATED ON LABEL INSIDE SWITCH COVER

REV	DESCRIPTION OF CHANGE	ECN	BY	DATE
G	IMPLEMENT NEW SWITCH 500316; ADD PLENUM LABEL	15559	IHG	26OCT12
F	CHANGED CAPACITOR; UPD WRG DIAG	10000	IHG	25JAN07

REV	DESCRIPTION OF CHANGE	ECN	BY	DATE
E	REVISED TO ALLOW LOWER INLET OPTION	2197	IHG	02MAY06
D	REPLACED INLET ASSY WITH NEW DESIGN	2161	IHG	23NOV05
C	CHANGED FLOAT LEVELS	2042	IHG	01MAR04
B	DEL "NOTICE" LABEL; REPLACED SW LEVER & SWITCH	2024	IHG	19FEB04
A	RELEASE TO PRODUCTION	1978	IHG	19MAY03
1	FOR REVIEW ONLY	---	IHG	15OCT02

THIS DOCUMENT CONTAINS PROPRIETARY INFORMATION OF HOLTON ROY. NEITHER RECEIPT NOR POSSESSION THEREOF CONFERS ANY RIGHTS TO REPRODUCE, USE, OR DISCLOSE, IN WHOLE OR IN PART, ANY SUCH INFORMATION WITHOUT PRIOR WRITTEN AUTHORIZATION FROM HOLTON ROY.

UNLESS OTHERWISE SPECIFIED: DIMENSIONS ARE IN INCHES(mm)
TOLERANCES:
FRACTIONS: ±1/64 ±.005 ±.010 ±.015 ±.1 ±.5
THIRD ANGLE PROJECTION

DRAWN: IHG DATE: 15OCT02
CHECK BY PRODUCT: A3/A5
MATERIAL CPEC NO: NA

HARTELL PUMPS
211 Ivyland Rd., Ivyland, PA 18974
www.hartell.com

TITLE: PUMP ASSEMBLY A5X-460

DO NOT SCALE DWG | SIZE: D | DWG NO: 806027 | REV: G
SHEET 1 OF 1