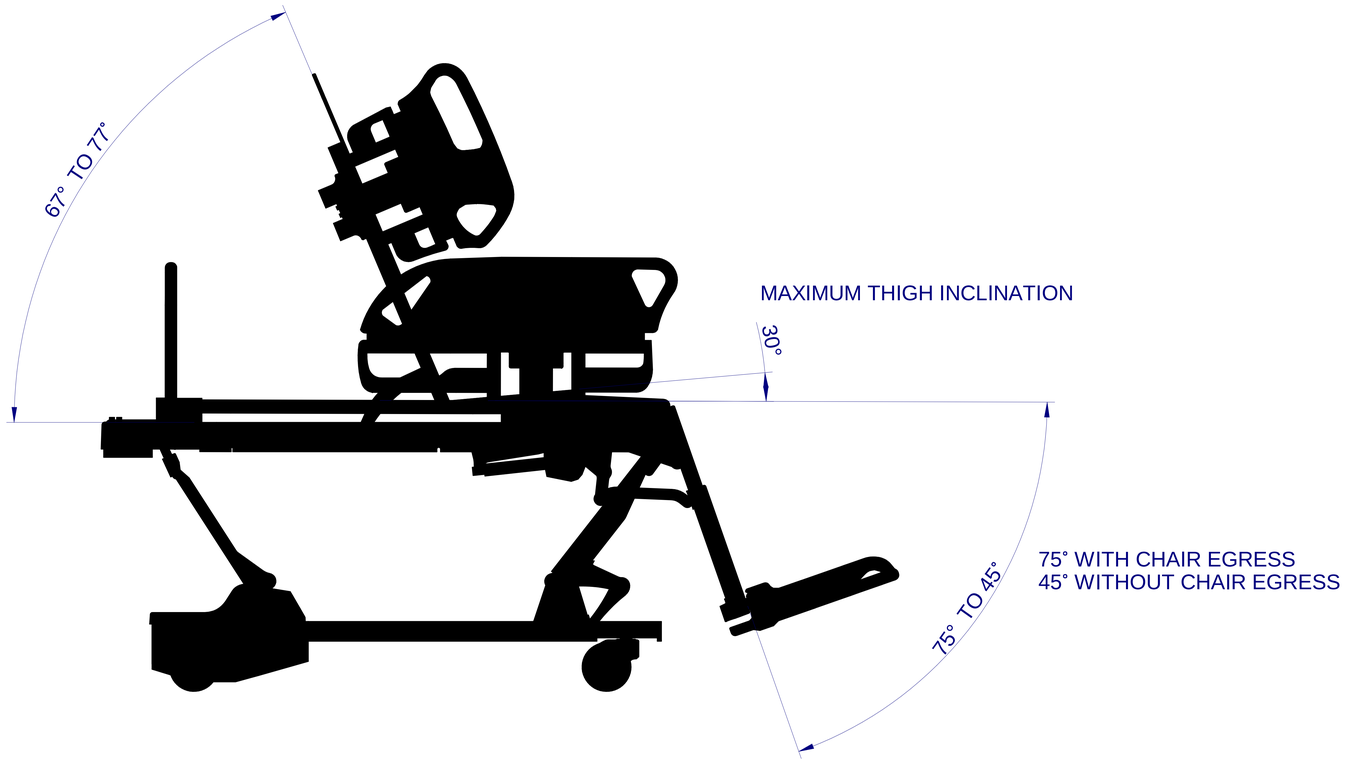
67° TO 77°
MAXIMUM THIGH INCLINATION
30°
75° TO 45°
75° WITH CHAIR EGRESS
45° WITHOUT CHAIR EGRESS

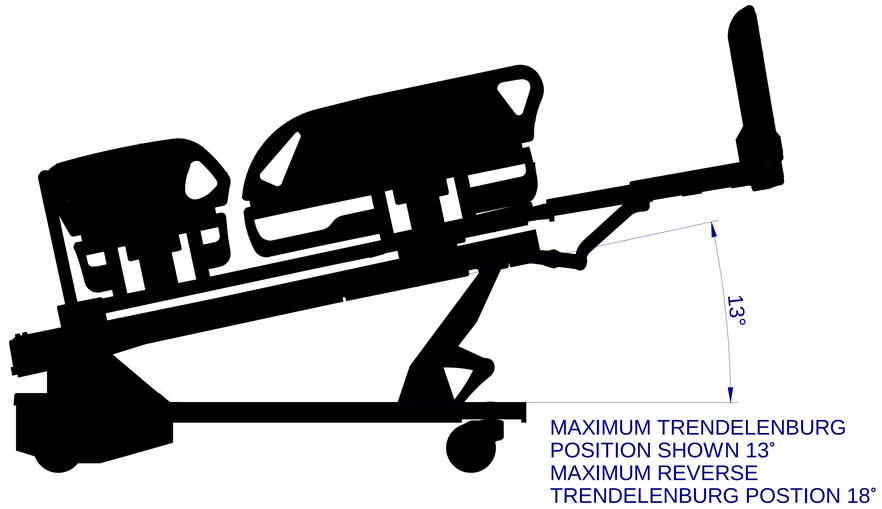
13°
MAXIMUM TRENDELENBURG
POSITION SHOWN 13°
MAXIMUM REVERSE
TRENDELENBURG POSTION 18°

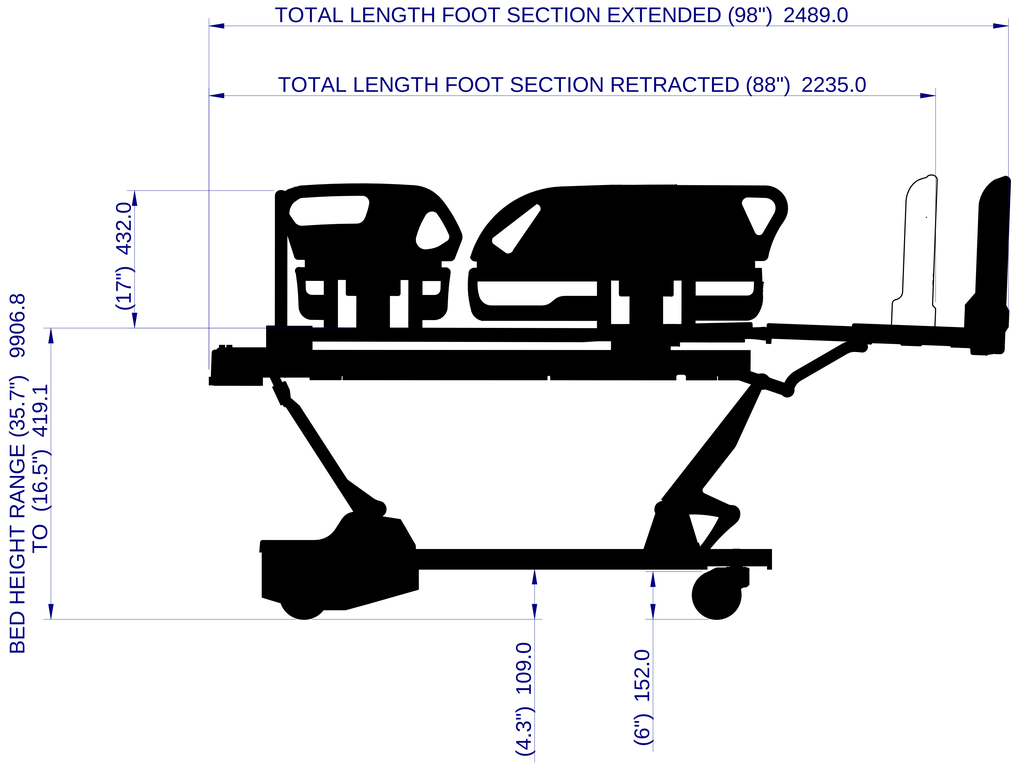
TOTAL LENGTH FOOT SECTION EXTENDED (98") 2489.0
TOTAL LENGTH FOOT SECTION RETRACTED (88") 2235.0
(17") 432.0
BED HEIGHT RANGE (35.7") 9906.8
TO (16.5") 419.1
(4.3") 109.0
(6") 152.0

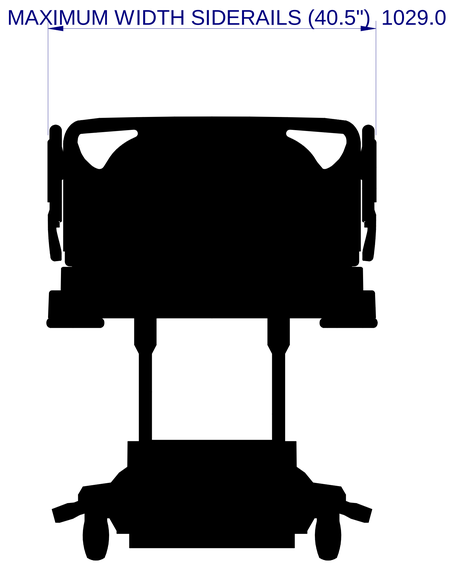
MAXIMUM WIDTH SIDERAILS (40.5") 1029.0