ITEM NO.	QTY	PART NUMBER	DESCRIPTION
1	1	MS-DSC-0.25-01-00	BODY
2	1	MS-DSC-0.25-02-00	DOOR
3	4	MS-DC-0.5-08-00	LEG
4	4	MS-DSC-0.25-03-00	DRAWER
5	2	------	7" HINGE C/W GREASE NIPPLE
6	1	MS-10-02	OPTIONAL CABINET TOP

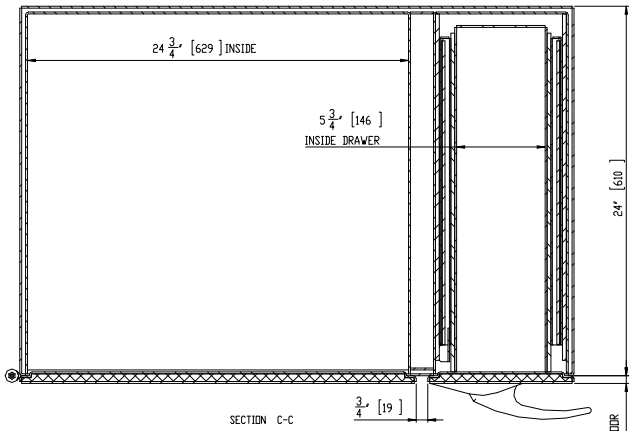

SECTION C-C

CUSTOMER APPROVAL ENDORSEMENT

☐ APPROVED AS SHOWN

☐ APPROVED WITH CHANGES SHOWN

BY: DATE:

TITLE:

COMPANY:

COMMENTS:

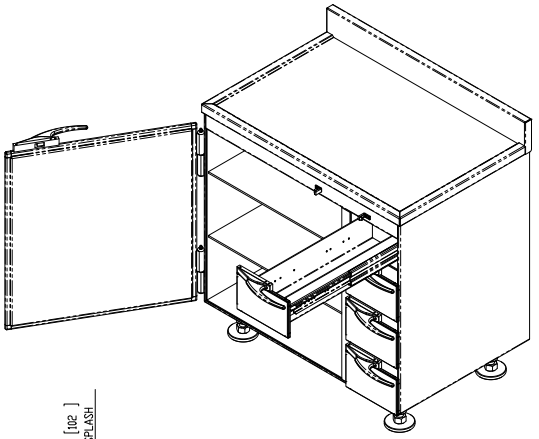

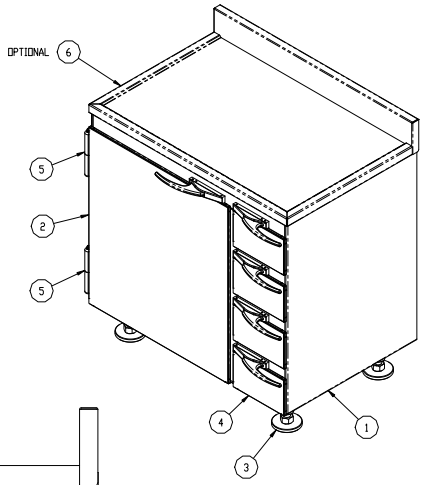

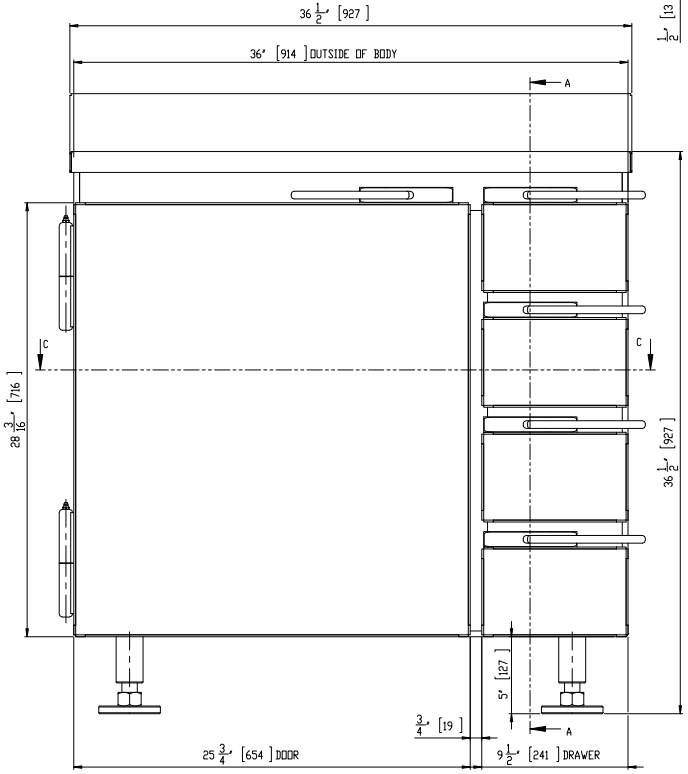

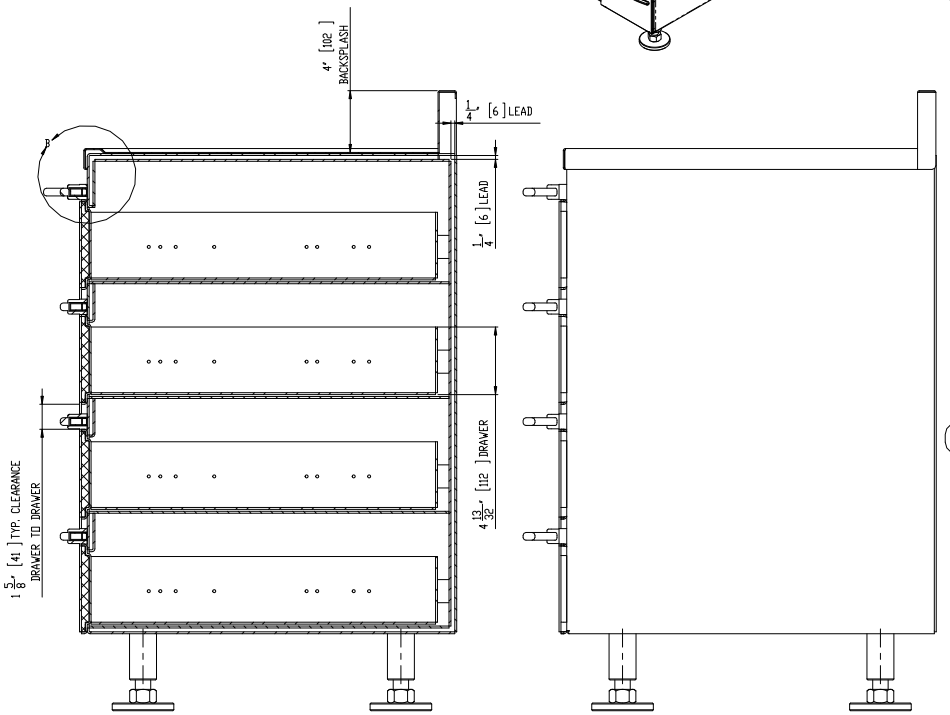

SECTION A-A

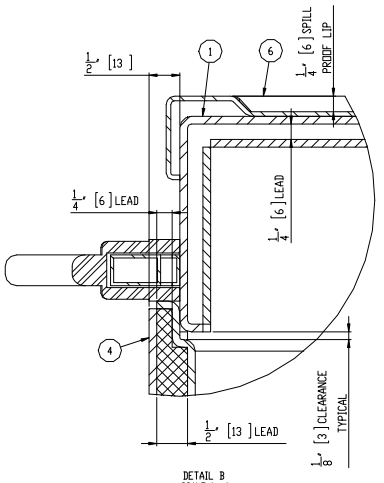

DETAIL B
SCALE 1 : 1

NOTES:

1. ALL UNITS ARE INCHES [mm] UNLESS OTHERWISE SPECIFIED
2. ITEM 6 (CABINET TOP) IS OPTIONAL

TOTAL LEAD WEIGHT	TOTAL CABINET WEIGHT (INCLUDING LEAD)
630 LBS. (286 kg)	1,360 LBS. (618 kg)

REV.	DESCRIPTION	DATE	APPROVED
A	ADDED WEIGHTS TABLE	2/27/2013	M.S.D.

REVISIONS

UNLESS OTHERWISE SPECIFIED

DO NOT SCALE DRAWING
DIMENSIONS SHOWN ON
INTERMEDIATE PART AND
INTERMEDIATE PART VIEW
DIMENSIONS ARE IN INCHES (mm)
TOLERANCES APPLY AS SHOWN BELOW
.X = ± .030
.XX = ± .010
.XXX = ± .005
FRACTIONS = ± 1/16
ANGLES = ± 0°

ALL MACHINED SURFACES TO BE 125
ALL WELD SPECIFICATIONS PER WELD SHOP

Solidworks MAINTAINED DATA
CHANGES SHALL BE INCORPORATED ELECTRONICALLY BY THE DESIGN ACTIVITY

PROPRIETARY
NO PART OF THIS DOCUMENT MAY BE REPRODUCED, STORED IN A RETRIEVAL SYSTEM, OR TRANSMITTED IN ANY FORM, WITHOUT THE WRITTEN PERMISSION OF MarShield - Mars Metal Company
DIVISION OF Marshall Metal Industries Ltd.

MarShield

Custom Radiation Protection, Shielding and Storage

TITLE: DECAY AND STORAGE CABINET ASSEMBLY

CUSTOMER/DEALER

DRAWN BY: M.S.D. DATE: 2/6/2013

SIZE: D DRAWING NO: MS-DSC-0.25-36.5-24-36.5 REVISION: A

SCALE: 1:4 SHEET 1 OF 1