ITEM NO.	QTY	PART NUMBER	DESCRIPTION
1	1	MS-PEBC-0.25-01-00	BODY
2	1	MS-PEBC-0.25-02-00	DOOR - LEFT HAND
3	1	MS-PEBC-0.25-02-00	DOOR - RIGHT HAND
4	4	MS-DC-0.5-08-00	LEG
5	4	------	7" HINGE C/W GREASE NIPPLE
6	1	MS-10-02	OPTIONAL CABINET TOP

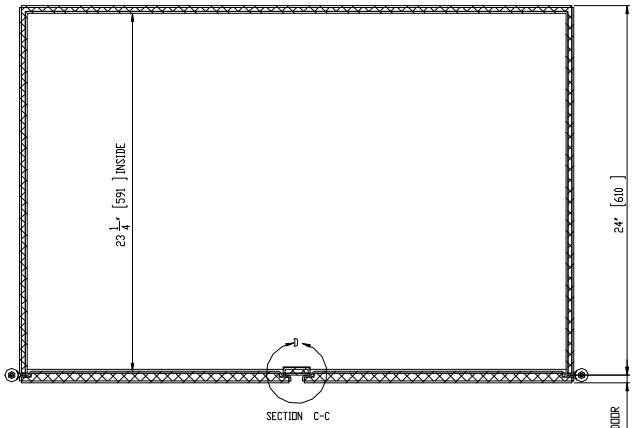

SECTION C-C

CUSTOMER APPROVAL ENDORSEMENT

☐ APPROVED AS SHOWN

☐ APPROVED WITH CHANGES SHOWN

BY: DATE:

TITLE:

COMPANY:

COMMENTS:

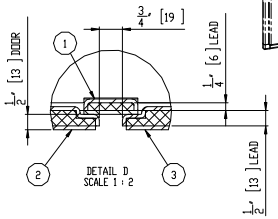

DETAIL D
SCALE 1 : 2

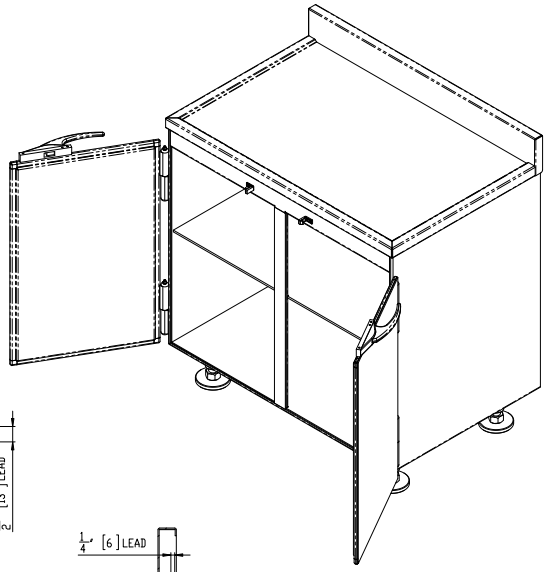

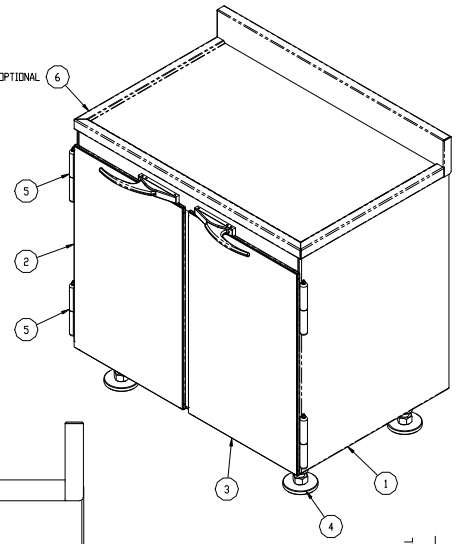

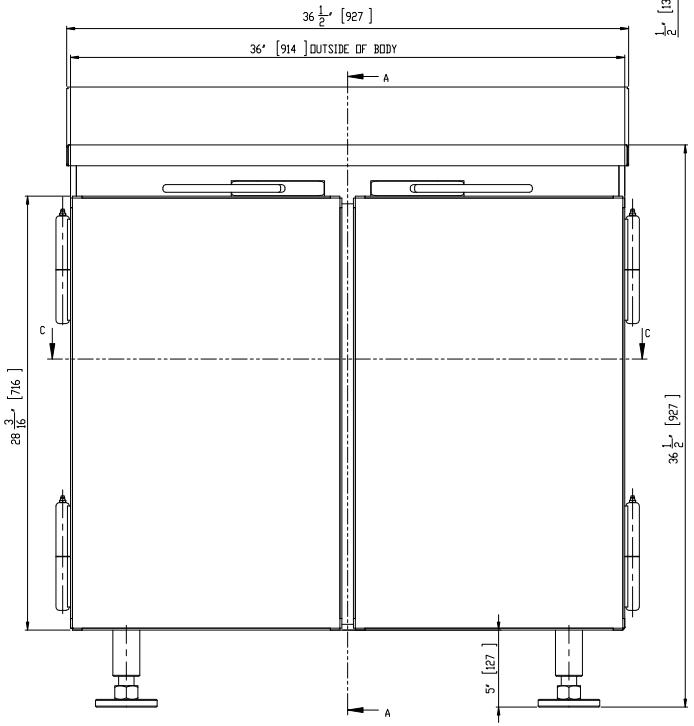

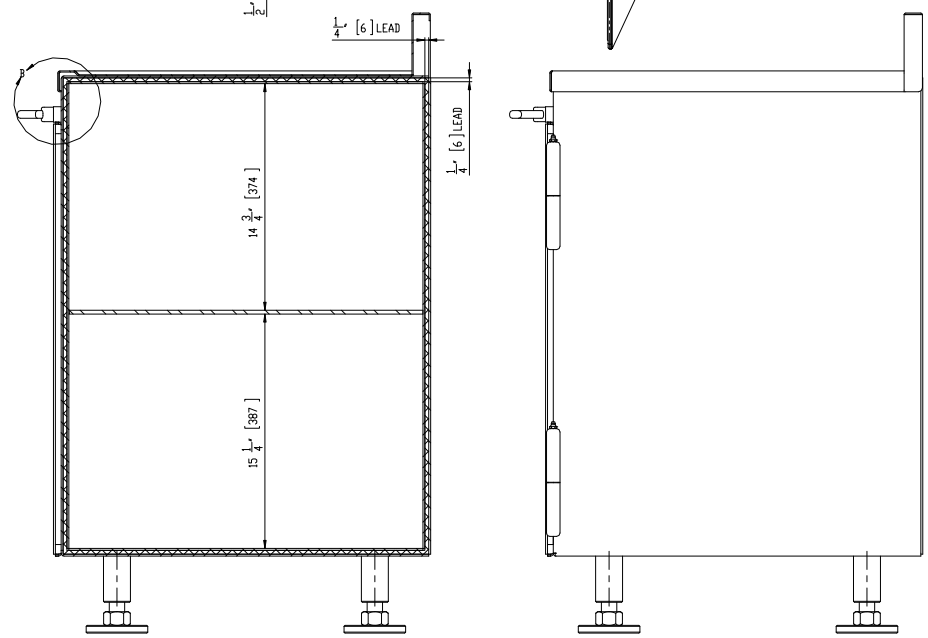

SECTION A-A

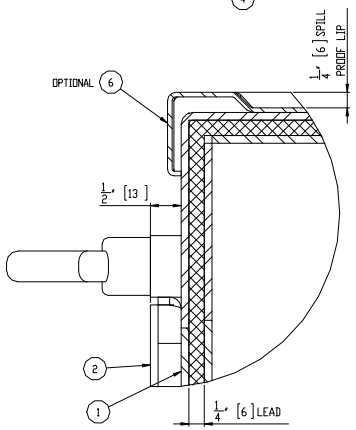

DETAIL B
SCALE 1 : 1

NOTES:

1. ALL UNITS ARE INCHES [mm] UNLESS OTHERWISE SPECIFIED
2. ITEM 6 (CABINET TOP) IS OPTIONAL

TOTAL LEAD WEIGHT	TOTAL CABINET WEIGHT (INCLUDING LEAD)
635 LBS. (289 kg)	1,130 LBS. (514 kg)

REV.	DESCRIPTION	DATE	APPROVED
A	ADDED WEIGHTS TABLE	2/27/2013	M.S.D.

REVISIONS

UNLESS OTHERWISE SPECIFIED

DO NOT SCALE DRAWING
DIMENSIONS SHOWN IN
INCHES AND MILLIMETERS
ALL DIMENSIONS ARE IN INCHES (mm)
TOLERANCES APPLY AS SHOWN BELOW
.X = ± .030
.XX = ± .010
.XXX = ± .005
FRACTIONS = ± 1/16
ANGLES = ± 0.5°

ALL MACHINED SURFACES TO BE 125
ALL WELD SPECIFICATIONS PER WELD SHOP

Scalabrinia MAINTAINED DATA
CHANGES SHALL BE INCORPORATED
ELECTRONICALLY BY THE DESIGN ACTIVITY

PROPRIETARY
NO PART OF THIS DOCUMENT MAY BE REPRODUCED, STORED IN A RETRIEVAL SYSTEM, OR TRANSMITTED IN ANY FORM, WITHOUT THE WRITTEN PERMISSION OF MarShield - Marsh Metal Company
DIVISION OF Marshall Metal Industries Ltd.

MarShield

Custom Radiation Protection, Shielding and Storage

TITLE: PREPARATION ENCLOSURE BASE CABINET ASSEMBLY

CUSTOMER/DEALER:

DRAWN BY: M.S.D. DATE: 2/8/2013

CHECKED BY: DATE:

APPROVED: DATE:

SIZE: D DRAWING NO: MS-PEBC-0.25-36.5-24-36.5 REVISION: A

SCALE: 1:4 SHEET 1 OF 1