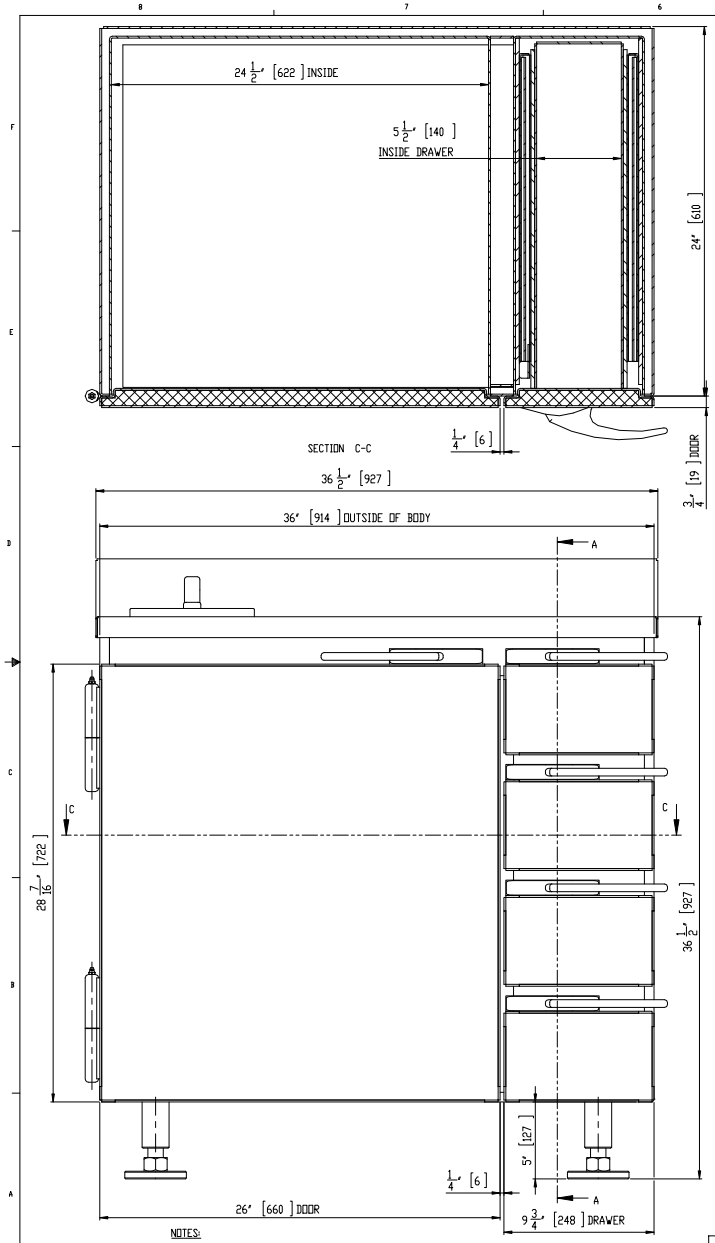

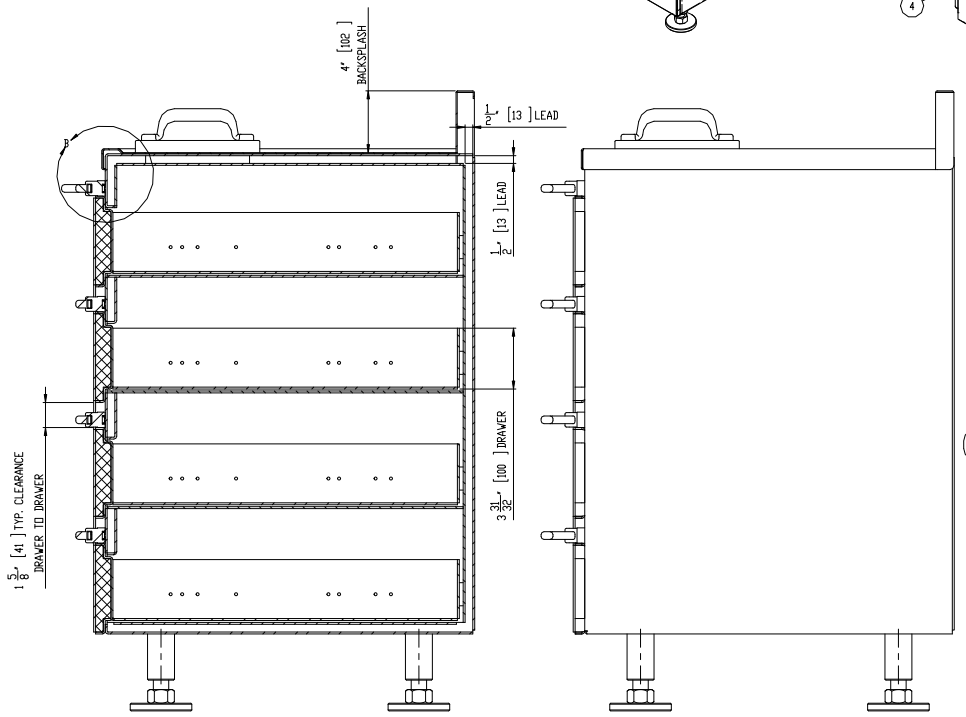

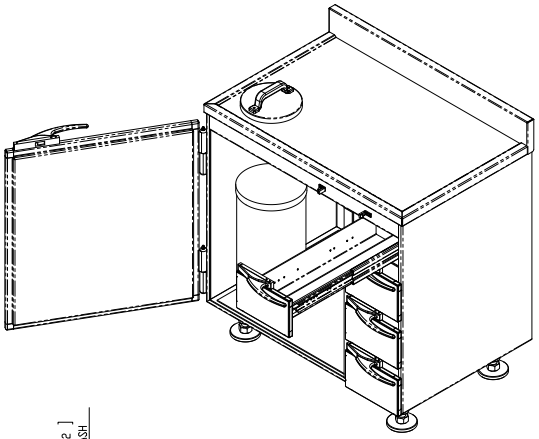

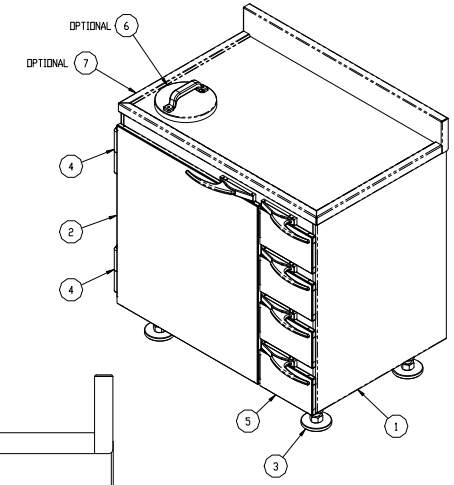

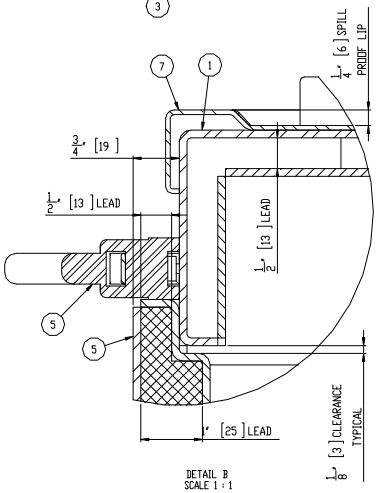

ITEM NO.	QTY	PART NUMBER	DESCRIPTION
1	1	MS-WSC-0.5-01-00	BODY
2	1	MS-DSC-0.5-02-00	DOOR
3	4	MS-DC-0.5-08-00	LEG
4	2	------	7" HINGE C/W GREASE NIPPLE
5	4	MS-DSC-0.5-03-00	DRAWER
6	1	------	OPTIONAL SHARPS HOLE C/W LEAD FILLED COVER
7	1	MS-10-04	OPTIONAL CABINET TOP

CUSTOMER APPROVAL ENDORSEMENT

☐ APPROVED AS SHOWN

☐ APPROVED WITH CHANGES SHOWN

BY: DATE:

TITLE:

COMPANY:

COMMENTS:

NOTES:

1. ALL UNITS ARE INCHES [mm] UNLESS OTHERWISE SPECIFIED
2. ITEM 6 (CABINET TOP) IS OPTIONAL
3. ITEM 7 (SHARPS HOLE & COVER) IS OPTIONAL

TOTAL LEAD WEIGHT	TOTAL CABINET WEIGHT (INCLUDING LEAD)
1,240 LBS. (564 kg)	1,880 LBS. (855 kg)

REV.	DESCRIPTION	DATE	APPROVED
B	ADDED WEIGHTS TABLE	2/27/2013	M.S.D.
A	RELEASED FOR CUSTOMER REVIEW & APPROVAL	1/17/2013	M.S.D.

REVISIONS

UNLESS OTHERWISE SPECIFIED

DO NOT SCALE DRAWING
DIMENSIONS SHOWN IN INCHES AND MILLIMETERS ARE FOR REFERENCE ONLY
DIMENSIONS ARE IN INCHES [mm]
TOLERANCES APPLY AS SHOWN BELOW
.X = ± .030
.XX = ± .010
.XXX = ± .005
FRACTIONS = ± 1/16
ANGLES = ± 1/2°

ALL MACHINED SURFACES TO BE 125
ALL WELD SPECIFICATIONS PER WELD SHOP

Scalabrinia MAINTAINED DATA
CHANGES SHALL BE INCORPORATED ELECTRONICALLY BY THE DESIGN ACTIVITY

PROPRIETARY
NO PART OF THIS DOCUMENT MAY BE REPRODUCED, STORED IN A RETRIEVAL SYSTEM, OR TRANSMITTED IN ANY FORM, WITHOUT THE WRITTEN PERMISSION OF MarShield - Mars Metal Company DIVISION OF Marsweld Metal Industries Ltd.

MarShield — Custom Radiation Protection, Shielding and Storage

TITLE: WASTE & STORAGE CABINET ASSEMBLY

CUSTOMER/DEALER

DRAWN BY: M.S.D. DATE: 1/16/2013

SIZE: D DRAWING NO: MS-WSC-0.5-36.5-24-36.5 REVISION: B

SCALE: 1:4 SHEET 1 OF 1