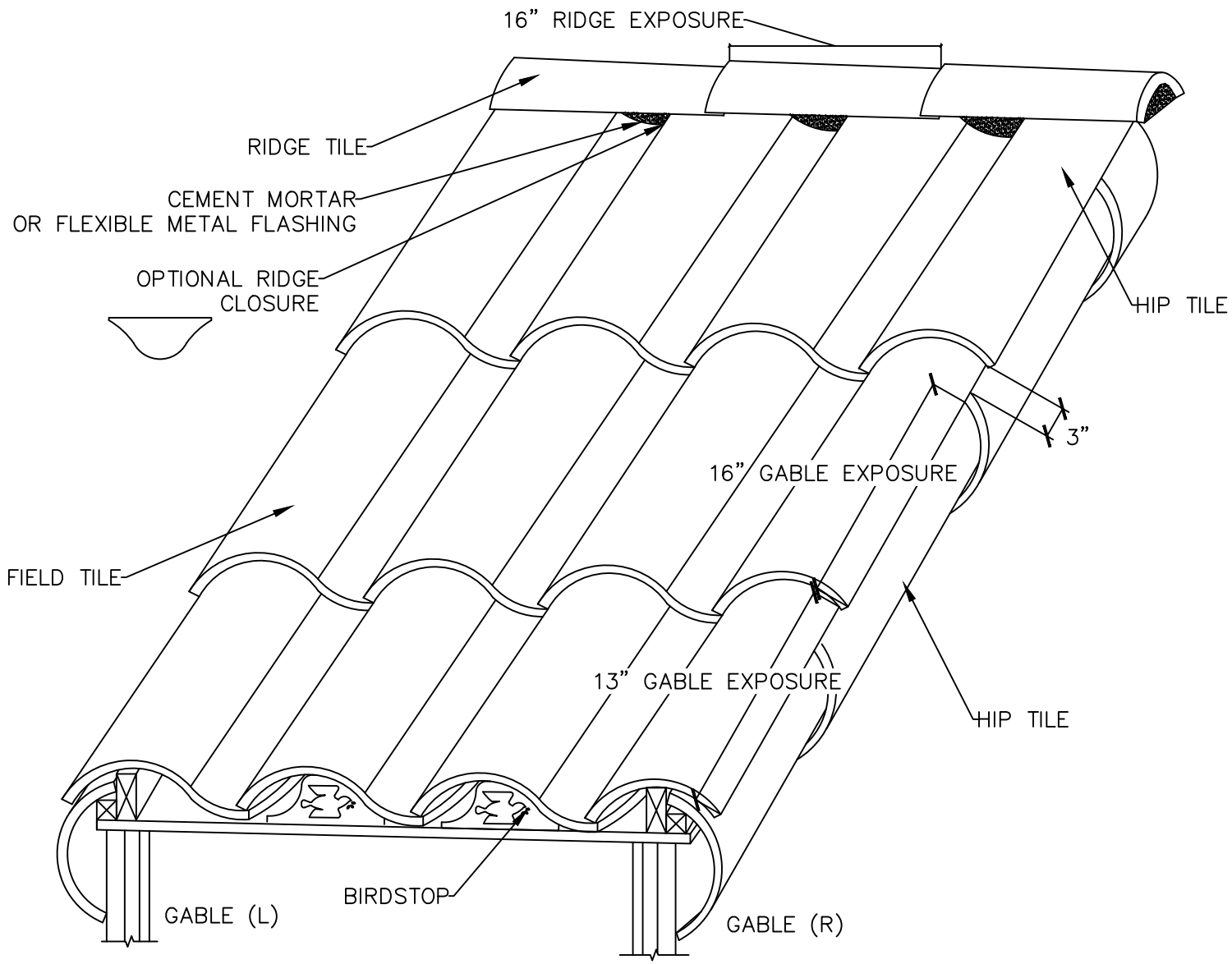

FIELD DETAIL

MCA – CLASSIC "S" – OVERALL
N.T.S.