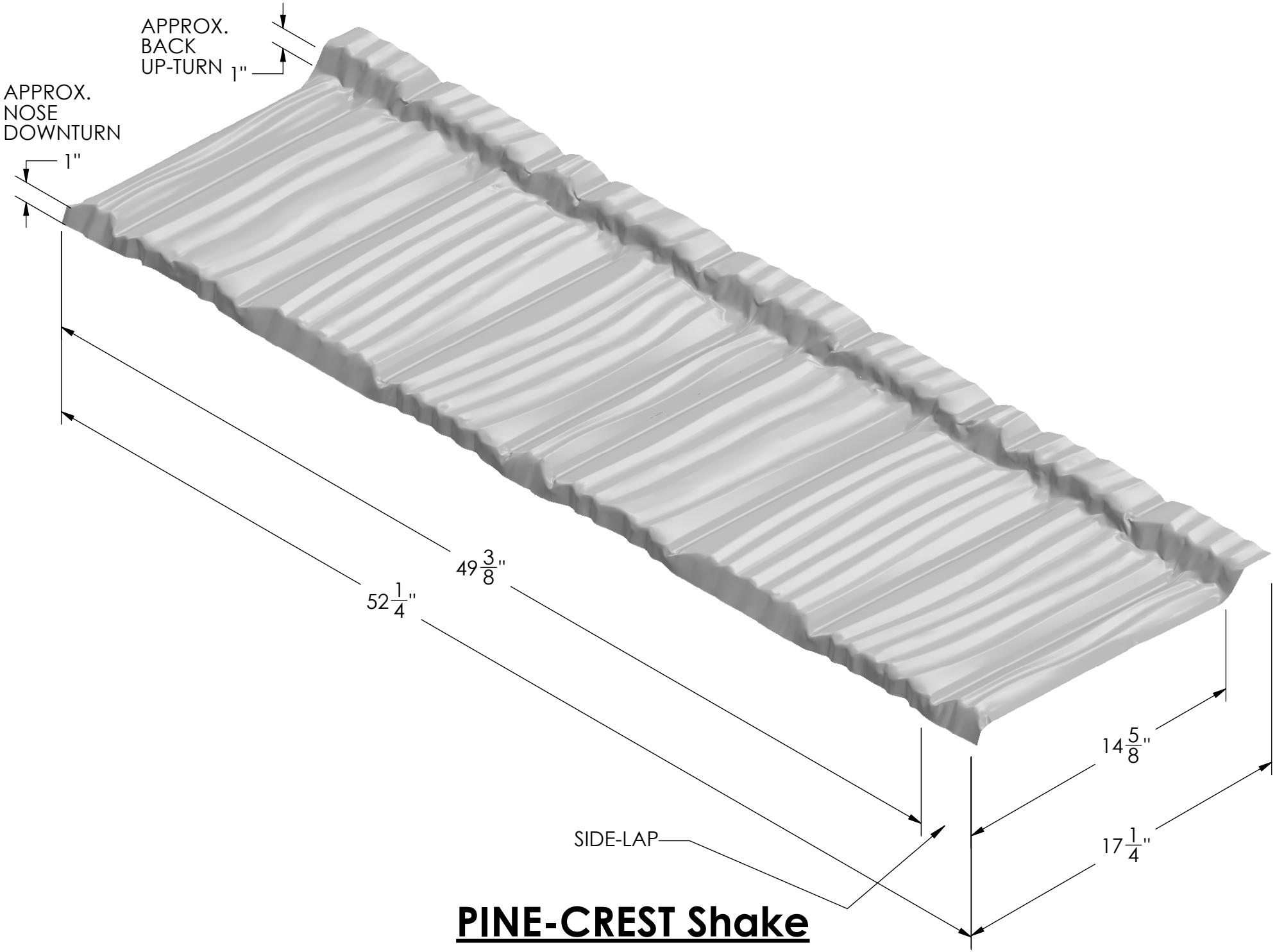

PINE-CREST Shake