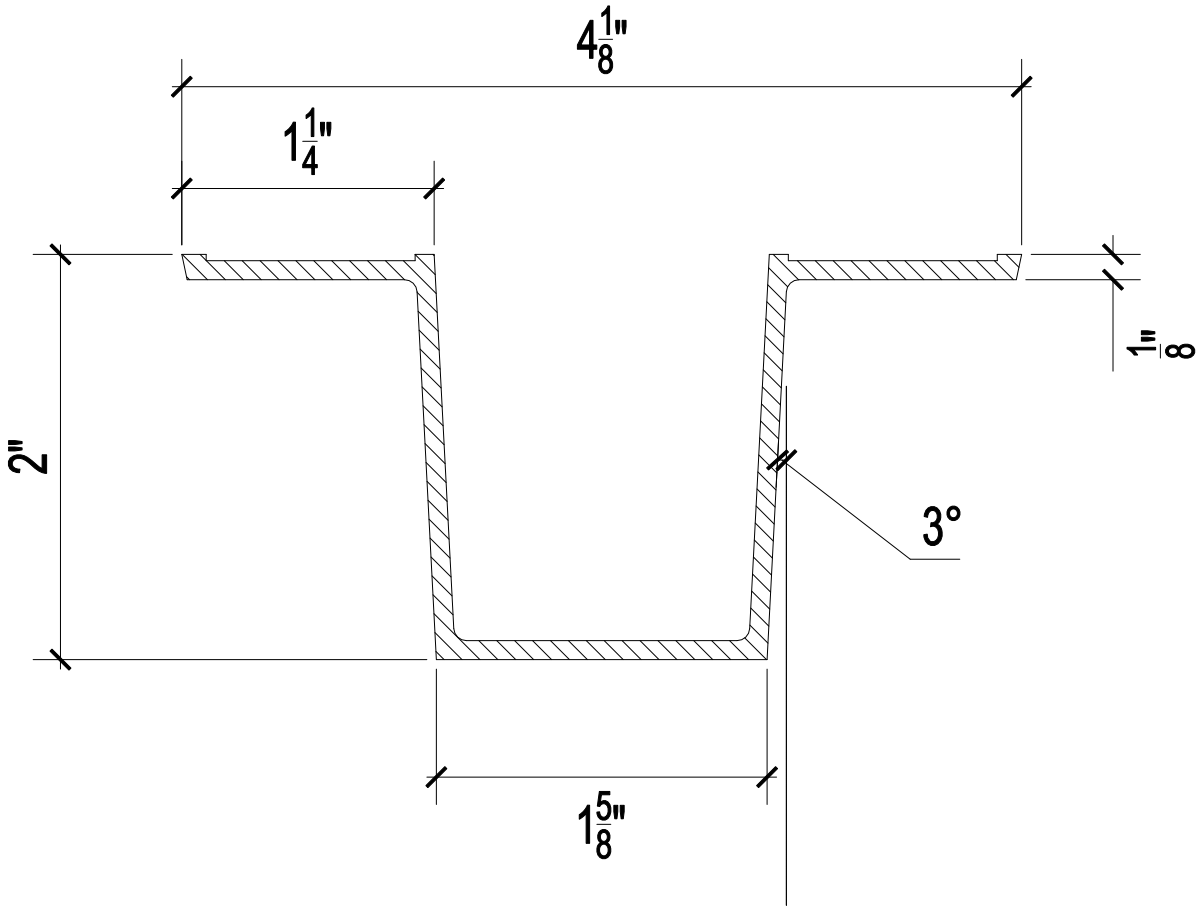

MOTO extrusions inc.
411 capitola avenue
capitola ca. 95010
ph: 1.855.532.MOTO (6686) fax: 1.831.479.9325

CUSTOMER

PART NAME 2" HAT CHANNEL