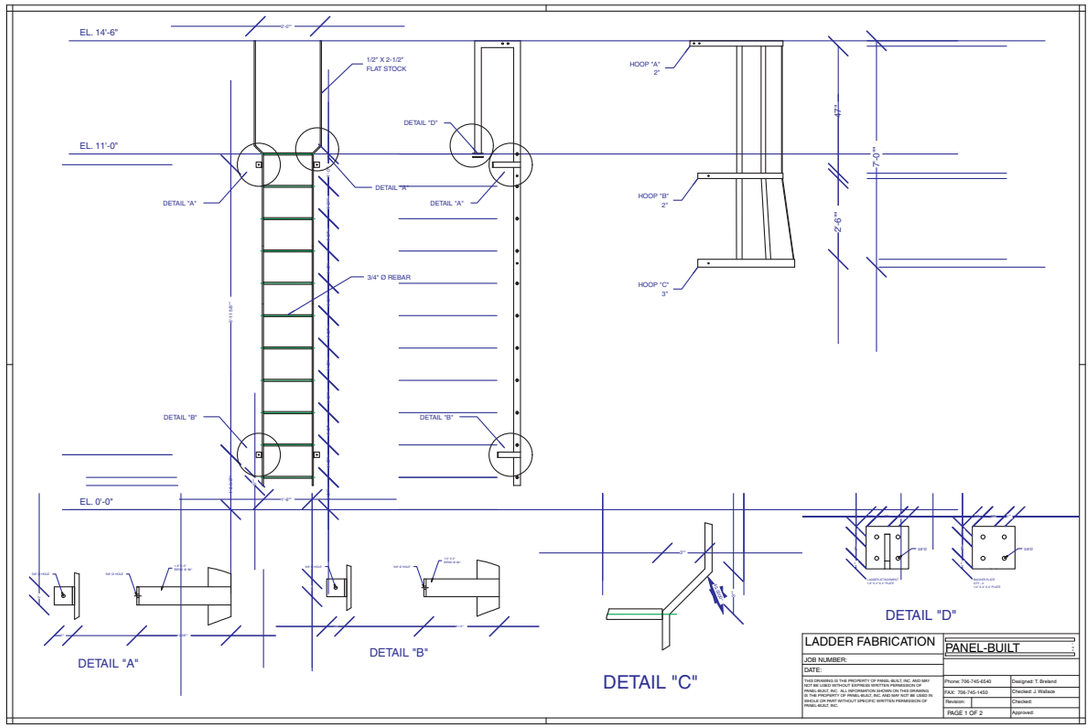

LADDER FABRICATION	PANEL-BUILT	
JOB NUMBER:		
DATE:		
THIS DRAWING IS THE PROPERTY OF PANEL-BUILT, INC. AND MAY NOT BE REPRODUCED OR DISTRIBUTED WITHOUT WRITTEN PERMISSION OF PANEL-BUILT, INC. ALL INFORMATION SHOWN ON THIS DRAWING IS THE PROPERTY OF PANEL-BUILT, INC. AND MAY NOT BE USED IN WHOLE OR PART WITHOUT SPECIFIC WRITTEN PERMISSION OF PANEL-BUILT, INC.	Phone: 706-745-6540	Designed: T. Breland
	FAX: 706-745-1450	Checked: J. Wallace
	Revision:	Checked:
	PAGE 1 OF 2	Approved:

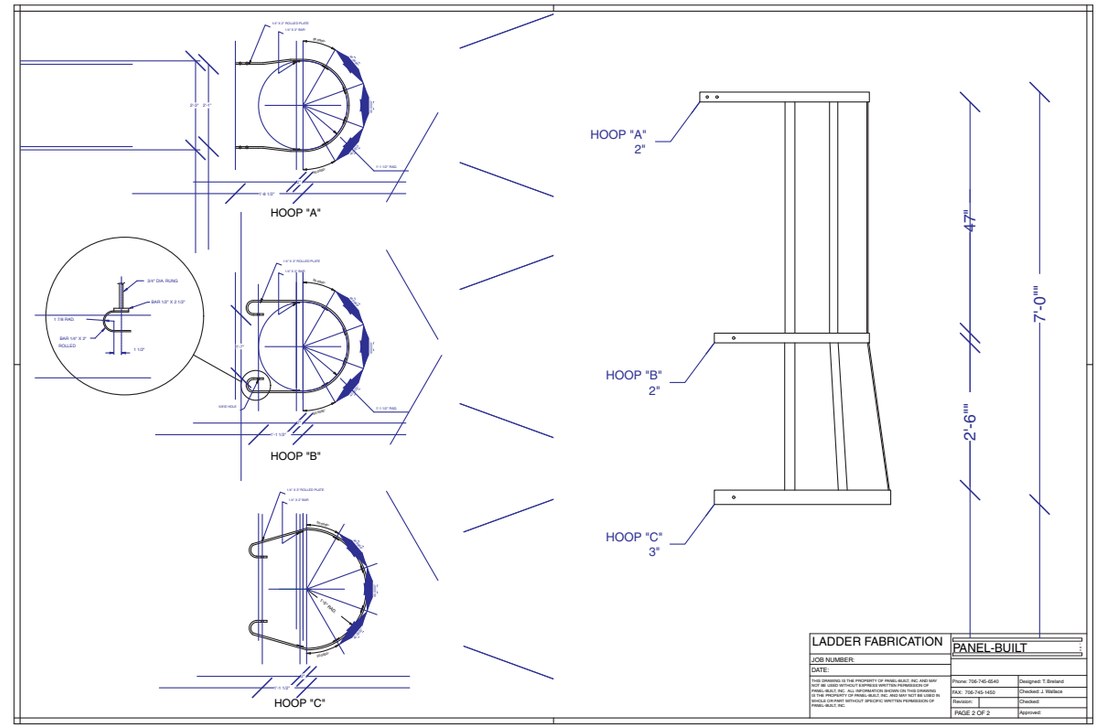

LADDER FABRICATION	PANEL-BUILT	
JOB NUMBER:		
DATE:		
THIS DRAWING IS THE PROPERTY OF PANEL-BUILT, INC. AND MAY NOT BE REPRODUCED OR DISTRIBUTED WITHOUT WRITTEN PERMISSION OF PANEL-BUILT, INC. ALL INFORMATION SHOWN ON THIS DRAWING IS THE PROPERTY OF PANEL-BUILT, INC. AND MAY NOT BE USED IN WHOLE OR PART WITHOUT SPECIFIC WRITTEN PERMISSION OF PANEL-BUILT, INC.	Phone: 706-745-6540	Designed: T. Breland
	FAX: 706-745-1450	Checked: J. Wallace
	Revision:	Checked:
	PAGE 2 OF 2	Approved: